B30L

LOW PROFILE 4X4

Articulated Dump Truck

- Gross Power: 290 kW (389 hp)
- Gross Torque: 2 000 Nm (1,475 lbft)
- Rated Payload: 30 000 kg (66,139 lbs)

BELL

Technical Data - B30L Low Profile ADT 4x4

ENGINE

Merc OM501LA

Configuration
V6 with exhaust brake valve

Aspiration
Turbocharged

Cooling System
Single pass radiator

Gross power
290 kW (389 hp) @ 1 800 rpm SAE J1349

Net Power
283 kW (380 hp) @ 1 800 rpm

Gross Torque
2 000 Nm (1,475 lbft) @ 1 300 rpm SAE J1349

Displacement
11,9 litres (726 cu.in)

Fuel tank capacity
570 litres (150 US gal)

TRANSMISSION

Allison 4 000

Layout
Planetary transmission, fully automatic

Gear layout
Constant mesh, clutch operated

Clutch type
Hydraulically operated, multiple disc

Torque converter layout
Integral with transmission, with lock-up in all gears

Stall torque ratio
1,897:1

TRANSFER BOX

Bell - remote mounted

Manufacturer
Bell

Model
17 100

Layout
Three in-line helical gears

Inter axle diff lock
Yes (optional locked in permanent)

AXLES

Kessler - 40 ton

Differential type
Spiral bevel gear

Final drive type
Outboard heavy duty planetary reduction hubs

Housing type
Steel fabricated

BRAKING SYSTEM

SAHR Brakes

Brake Type
Kessler SAHR brakes on all wheels

Brake Application
Spring applied, pressure released forced cooling with 140 l tank

Emergency Brake
Manual

Hydraulic Emergency Brake Automatic Application
Neutral
Engine switch off

WHEELS

Front
26.5R25 Radial

Rear
26.5R25 Radial

HYDRAULIC SYSTEM

Load-sensing with priority for brakes and steering. A ground driven, load sensing emergency steering pump is fitted as standard. Central manifold block for easy trouble shooting.

Pump Type
Axial piston variable displacement load-sensing

Application
Steering, bin tipping and hydraulic brake charging

Flow
156 l/min (41 US gpm)

Pressure
250 kPa (36.26 psi)

Hydraulic Tank Capacity
145 litres (38 US gal)

STEERING SYSTEM

Hydromechanically articulated with two double acting hydraulic cylinders

Angle
+- 42 degrees

DUMPING SYSTEM

Power down time
10 seconds

Raise time
15 seconds

Tipping Angle
65 degrees

PNEUMATIC SYSTEM

Air drier with heater and integral unloader valve, serving auxiliary functions.

System pressure
810 kPa (123 psi)

ELECTRICAL SYSTEM

Voltage
24 V

Battery type
Two maintenance free permanently sealed

Battery Capacity
2 X 105 Ah

Alternator Rating
28 V 80 A

VEHICLE SPEEDS

1st	7 km/h	4 mph
2nd	13 km/h	8 mph
3rd	18 km/h	11 mph
4th	25 km/h	16 mph
R	5,3 km/h	3 mph

Operating Weights

OPERATING WEIGHTS		LOAD CAPACITY	
EMPTY	**kg (lbs)**	**BODY**	**m³ (yd³)**
Front	16 052 (35 389)	Struck Capacity	12 (16,3)
Rear	9 423 (20 774)	Heaped Capacity (SAE 2:1)	14,5 (20,3)
Total	25 475 (56 163)		
		Rated Payload	30 000 kg
LADEN			(66 139 lb)
Front	24 395 (53 782)		
Rear	31 080 (68 519)		
Total	55 475 (122 301)		

Dimensions

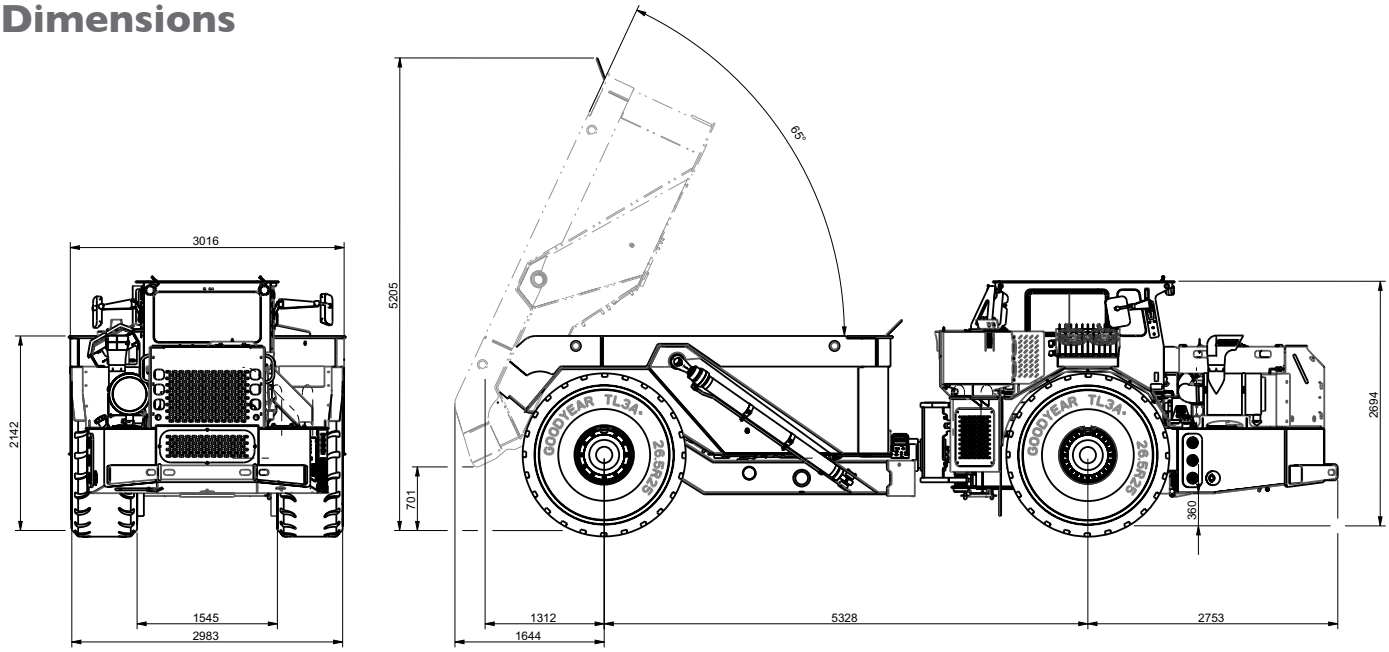

MACHINE DIMENSIONS	(mm)		SHAFT DIMENSIONS	(mm)
Height (of canopy)	2 694		Height	3 260
Width (of bin)	3 016		Width	4 500
Length	9 393		(As per Minerals Act.)	
Inside turning radius	4 946			
Outside turning radius	8 958			

Gradeability / Rimpull

1. Determine tractive resistance by finding intersection of vehicle mass line and grade line. NOTE: 2% typical rolling resistance is already assumed in chart and grade line.
2. From this intersection, move straight left across charts until line intersects rimpull curve.
3. Read down from this point to determine maximum speed attained at that tractive resistance.

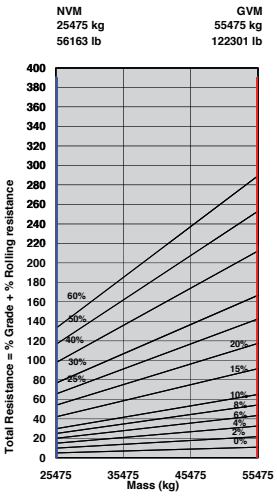

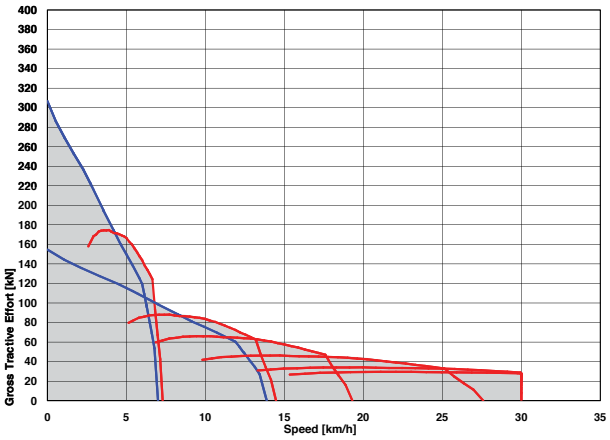

Retardation

1. Determine retardation force required by finding intersection of vehicle mass line.
2. From this intersection, move straight left across charts until line intersects the curve. NOTE: 2% typical rolling resistance is already assumed in chart.
3. Read down from this point to determine maximum speed.

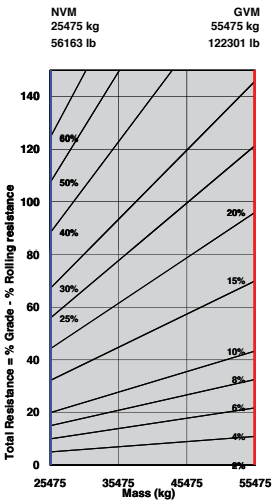

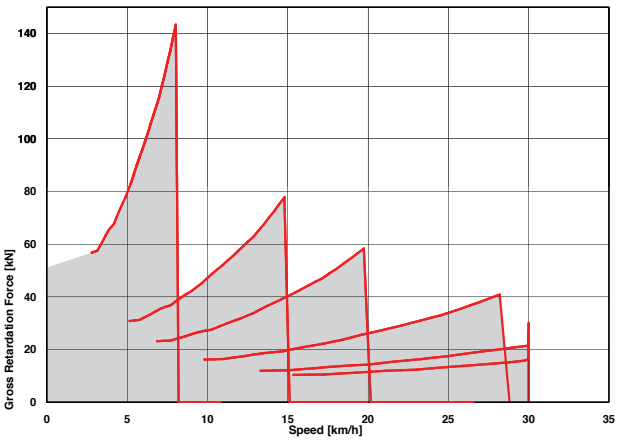

Features and Options

● STANDARD ▲ OPTION

CONTROL/DISPLAY

- 25 Button SSM (pistol grip) with digital display

LIGHTING

- 6 Forward facing worklights
- 4 Rear facing work lights
- 2 Rear facing LED brake lights
- On/off switch on dash

CAB

- Enclosed with airconditioning system 28 500 btu @ 45 °C ambient
- Trainer seat available

OPTIONS

- ▲ Central greasing system
- ▲ Fire suppression system
- ▲ Fire extinguishers

GENERAL

- Bin liners
- SAHR Brakes
- 2 Electrical hooters
- Voltmeter
- Flashing beacon
- Exhaust brake
- Belly plate
- Exhaust purifier
- Exhaust silencer
- Non slip surfaces on all walk ways
- Centre forward facing cab
- Engine protection
- Engine over-rev protection
- Suspension seat
- Speedometer
- Incline assist

FEATURES OF LOW PROFILE ARTICULATED DUMP TRUCKS...

• With a highly efficient power and drive-train combined with low rolling resistance the Bell B30L delivers superior fuel efficiency.

• High performance engine with increased power and torque and long service intervals.

• Fewer scheduled service requirements.

All dimensions are shown in millimetres, unless otherwise stated between brackets.
Under our policy of continuous improvement, we reserve the right to change technical data and design without prior notice. Photographs featured in this brochure may include optional equipment.

BELL INTERNATIONAL: Tel: +27 (0)35 907 9431
E-mail: marketing@bellequipment.com Web: www.bellequipment.com

Tel: +61 (0)8 9355 2442
Tel: +49 (0)663 191 130
Tel: +27 (0)11 928 9700
Tel: +44 (0)1283 712 862
Tel: +33 (0)5 55 892 356
Tel: +7 495 287 80 02
Tel: (704) 655 2802

Strong Reliable Machines
Strong Reliable Support

BELL

Spec21340618 - B30L Low Profile ADT (English)