E-series 4x4

Articulated Dump Trucks

B30E | B45E | B60E • PIN3

Stage V/Tier 4F Certified



- Same payload as 6x6 models
- Smaller turning circle than similar sized 6x6 model
- Highly maneuverable in tight spaces
- No tire scuff means less tire and road surface damage

BELL

The All-Wheel Drive advantage

The Bell 4x4 range, comprising a 30-ton, 45-ton and 60-ton model, offers customers the same tonnage as our traditional Articulated Dump Trucks (ADTs), at a related lower cost per ton while still offering off-road capabilities that non-ADT solutions cannot match.

The range has been developed through the Bell tradition of listening to our customers. They were looking for a machine that would perform better than conventional haulage solutions in slippery and undulating conditions but didn't need the 'go anywhere' ability of a 6x6 ADT. In response Bell has filled this conspicuous gap in the market with its practical 4x4 alternatives.



Equipped with two-axles, these ADTs are based on the proven articulated technology of their corresponding 6x6 models. This applies entirely to the powerhead of the vehicles where the proven SSM (sealed switch module), CDU (central display unit) and B-drive automotive controller architecture combine to provide the full array of standard Bell productivity and safety features, including i-Tip, Tipsafe, Hill Assist and onboard weighing with Fleetm@tic® integration. Bell 4x4 ADTs continue to set benchmarks in terms of reliability, efficiency and driving comfort with their practical design.



Delivering productivity during adverse weather conditions where rigid machines are unable to operate, the Bell 4x4 range also tolerates less site maintenance, which has large cost and hassle implications for many sites. In addition, 4x4 trucks are proven to cause less road damage than a 6x6 ADT, where the three-axle configuration tends to scuff the road surface when turning.

• The machine provides superior retardation through all wheels, increasing braking efficiency and reducing wear.

• These features combine to provide superior tire life compared to similar sized rigid trucks in almost all applications.

• Adaptive front suspension provides superior ride comfort whilst rear suspension on the B45E and B60E improves comfort even further, which ultimately results in higher productivity.

• The flat-bottom bin design reduces carryback, increasing efficiency and reducing contamination in certain applications.

• In deep, soft mud they won't necessarily match their three-axle counterparts, but they have proven themselves to be more than capable machines in challenging conditions.



Specifications	B30E 4x4	B45E 4x4	B60E 4x4
Maximum net power	260 kW (348 hp)	390 kW (523 hp)	430 kW (577 hp)
Operating mass			
Empty	21,143 kg (46,613 lbs)	32,964 kg (72,675 lbs)	42,878 kg (94,530 lbs)
Loaded	49,143 kg (108,341 lbs)	73,964 kg (163,065 lbs)	97,878 kg (215,785 lbs)
Rated payload	28,000 kg (61,729 lbs)	41,000 kg (90,390 lbs)	55,000 kg (121,254 lbs)
2:1 heaped capacity	18,5 m^3 (24.2 yd^3)	25 m^3 (32.7 yd^3)	35 m^3 (45.8 yd^3)



- The oscillation joint, inherited from the proven Bell 6x6 range, is what makes an ADT by keeping the wheels on the ground to ensure traction when driving over rough terrain.
- Articulated steering between the front and rear chassis produces much tighter turning circles than most steered axle trucks and make the Bell 4x4 range ideal for tight sites.
- By configuring the driveline to direct drive to all wheels, Bell 4x4 trucks can go places where conventional trucks cannot.



M

The **B30E 4x4** is internationally successful as a most economical solution for bulk handling.



L

The **B45E 4x4** is designed for flexible use in quarrying and smaller mining operations.



XL

The **B60E 4x4** has been uncompromisingly engineered for high productivity in mining under all weather conditions.



Smarter fleet management



Cutting edge technology, helping you run your fleet smarter. Providing accurate, up-to-date operational data, production data and diagnostic data.

The key to a productive and profitable fleet, lies in the ability to monitor and manage your machines and operators efficiently. Machine operational data is processed and compiled into useful production and performance statistics, accessible via the Bell Fleetm@tic® website. These reports are also automated and emailed directly to you. The two monitoring packages that we have available, are:

- **The Classic Package** supplies you with excellent information for you to have a very good understanding of how your machine is operating for each working shift. This package comes standard with the machine for 5 years.
- **The Premium Package** is focused on customers who need to have extremely detailed information of the machine's operation. For this package we offer similar information to that of the Classic Package but for each individual laden - unladen cycle. In addition, live tracking is available on the Fleetm@tic® website on a per minute basis.

Fleetm@tic®:

- Maximize productivity
- Generate machine utilization reports
- Identify operator training requirements
- Pro-active maintenance planning
- Implement safety features
- Receive machine fault codes as well as suggested trouble shooting procedures
- Protect investments
- Receive real time geospatial data

Welcome to the ... BELL Family

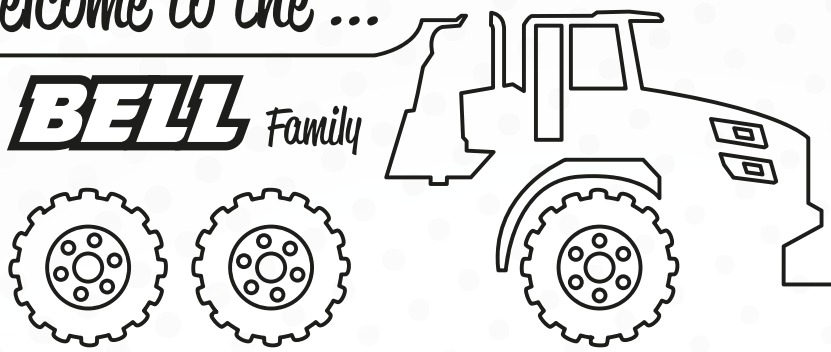

"Power up and plug in to our end-to-end customer solutions!"

START

Through our living motto **'Strong Reliable Machines, Strong Reliable Support'**, we offer both exceptional equipment and aftermarket support products because we want your Bell ownership experience to be a happy one.

SETTING YOU UP FOR SUCCESS

- TRAINING

PROTECTING YOUR ASSETS

- LUBECHECK
- MAINTENANCE CONTRACT
- EXTENDED WARRANTY
- FLEETM@TIC®

KEEPING YOUR MACHINE RUNNING

- TECHNICAL SUPPORT
- LUBRICANTS
- SPECIAL TOOLS
- PARTS
- BELL OUTLETS
- SERVICE KITS

GIVING YOU EXTRA VALUE, LONGER LIFE

- REMAN COMPONENTS
- PRE-OWNED EQUIPMENT

SUPPORTING YOU EVERY STEP OF YOUR BELL OWNERSHIP EXPERIENCE



BELL

Parts & Service

B30E 4x4 Articulated Dump Truck

ENGINE
Manufacturer
Mercedes Benz

Model
OM936LA

Configuration
Inline 6, turbocharged and intercooled

Maximum Net Power
348 hp (260 kW) at 1,800 rpm in accordance with UN ECE R120

Gross Torque
1,069 lbft (1,450 Nm)
@ 1,200 -1,600 rpm

Displacement
469 cu.in (7.7 liters)

Auxiliary Brake
Jacobs Engine Brake®

Fuel Tank Capacity
79.78 US gal (302 liters)

AdBlue® Tank Capacity
8.2 US gal (31 liters)

Certification
OM936LA meets EPA Tier 4 Final/ Stage V emissions regulations

TRANSMISSION
Manufacturer
Allison

Model
3400 P ORS

Configuration
Fully automatic planetary transmission

Layout
Engine mounted

Gear Layout
Constant meshing planetary gears, clutch operated

Gears
6 Forward, 1 Reverse

Clutch Type
Hydraulically operated multi-disc

Control Type
Electronic

Torque Control
Hydrodynamic with lock-up in all gears

TRANSFER CASE
Manufacturer
Kessler

Series
W1400

Layout
Remote mounted

Gear Layout
Three in-line helical gears

Output Differential
Interaxle 33/67 proportional differential. Automatic inter-axle differential lock.

AXLES
Manufacturer
Bell

Model
Front: Bell 18T
Rear: Bell 36T

Front Differential
High input limited slip differential with spiral bevel gears

Final Drive
Outboard heavy duty planetary on all axles

BRAKING SYSTEM
Service Brake
Dual circuit, full hydraulic actuation wet disc brakes on front and rear axles. Wet brake oil is circulated through a filtration and cooling system.

Maximum brake force:
63,859 lbf (284 kN)

Park & Emergency
Spring applied, air released driveline mounted disc

Maximum brake force:
89,000 lbf (396 kN)

Auxiliary Brake
Jacobs Engine Brake®. Automatic retardation through electronic activation of wet brake system.

Total Retardation Power
Continuous: 445 hp (332 kW)
Maximum: 969 hp (723 kW)

WHEELS
Type
Radial Earthmover

Tire
Front: 23.5 R25
Rear: 875/65 R29

FRONT SUSPENSION
Semi-independent, leading A-frame supported by hydro-pneumatic suspension struts.

Active dual springrate Comfort Ride suspension, including height control.

HYDRAULIC SYSTEM
Full load sensing system serving the prioritized steering, body tipping and brake functions. A ground-driven, load sensing emergency steering pump is integrated into the main system.

Pump Type
Variable displacement load sensing piston

Flow
53 gal/min (202 L/min)

Pressure
4,500 psi (310 Bar)

Filter
5 microns

STEERING SYSTEM
Double acting cylinders, with ground-driven emergency steering pump.

Lock to lock turns
4.1

Steering Angle
45°

DUMPING SYSTEM
Two double-acting, single stage, dump cylinders

Raise Time
12 s

Lowering Time
10 s

Tipping Angle
70° standard, or any lower angle programmable

PNEUMATIC SYSTEM
Air drier with heater and integral unloader valve, serving park brake and auxiliary functions.

System Pressure
117 psi (8,1 Bar)

ELECTRICAL SYSTEM
Voltage
24 V

Battery Type
Two AGM (Absorption Glass Mat) type.

Battery Capacity
2 X 75 Ah

Alternator Rating
28V 100A

VEHICLE SPEEDS

1st	5 mph	8 km/h
2nd	9 mph	14 km/h
3rd	12 mph	19 km/h
4th	18 mph	29 km/h
5th	26 mph	42 km/h
6th	30 mph	49 km/h
R	4 mph	7 km/h

CAB
ROPS/FOPS certified 74 dBA internal sound level measured according to ISO 6396.

Load Capacity & Ground Pressure

OPERATING WEIGHTS		GROUND PRESSURE		LOAD CAPACITY		OPTION WEIGHTS	
UNLADEN	kg (lb)	LADEN-No Sinkage		BODY	m^3 (yd^3)		kg (lb)
Front	11,488 (25,327)	23.5 R 25	kPa (Psi)	Struck Capacity	15 (19.6)	Bin liner	1,380 (3,042)
Rear	9,655 (21,286)	Front	295 (42,8)	SAE 2:1 Capacity	18.5 (24.2)	Tailgate	1,051 (2,317)
Total	21,143 (46,613)			SAE 1:1 Capacity	21.5 (28)		
LADEN		875/65 R 29	kPa (Psi)	SAE 2:1 Capacity		EXTRA WHEELSET	
Front	13,940 (30,732)	Rear	442 (64)	with Tailgate	19.5 (25.5)	23.5 R25	544 (1,199)
Rear	35,203 (77,609)			Rated Payload	28,000 kg	875/65 R29	1,338 (2,950)
Total	49,143 (108,341)				(61,729 lbs)		

Dimensions

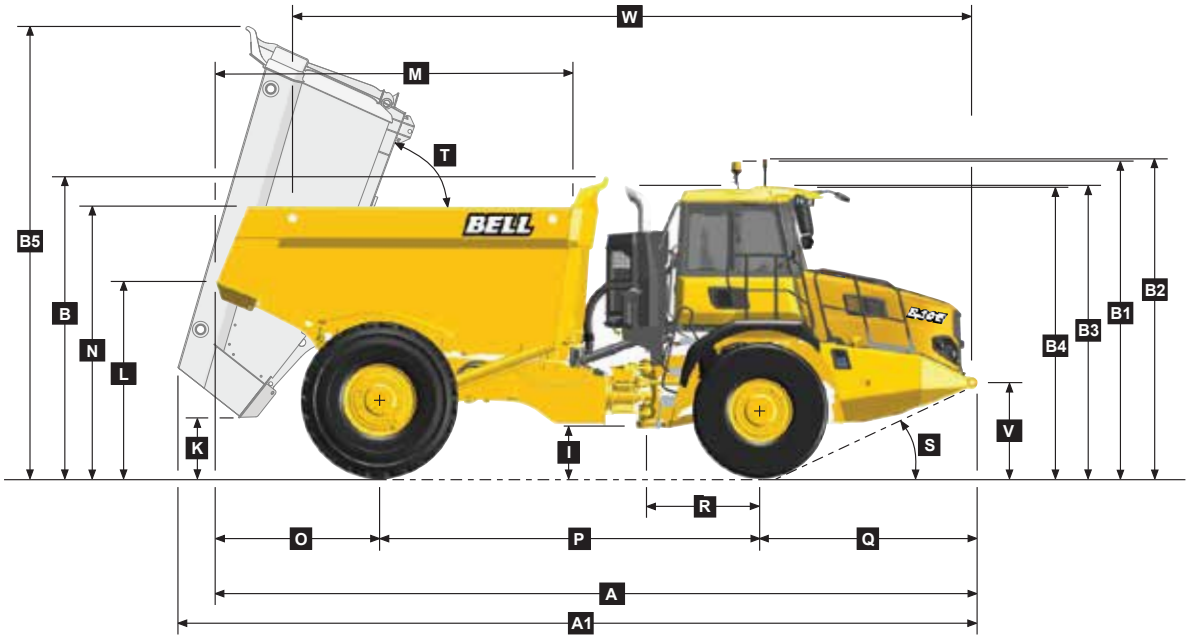

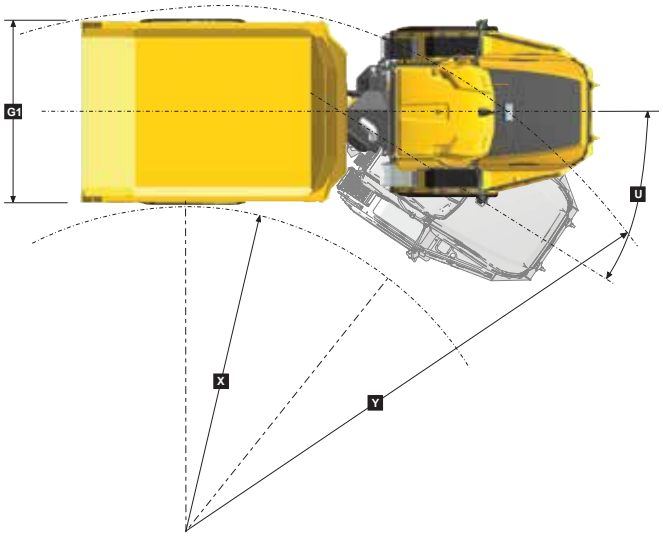



Machine Dimensions

A	Length - Transport Position	9 122 mm	(29 ft. 11 in.)
A1	Length - Bin Fully Tipped	9 709 mm	(31 ft. 10 in.)
B	Height - Transport Position	3 548 mm	(11 ft. 8 in.)
B1	Height - Rotating Beacon	3 718 mm	(12 ft. 2 in.)
B2	Height - Load Light	3 740 mm	(12 ft. 3 in.)
B3	Height - Exhaust Stack S5	3 430 mm	(11 ft. 3 in.)
B3	Height - Exhaust Stack S2	3 504 mm	(11 ft. 3 in.)
B4	Height - Cab	3 418 mm	(11 ft. 6 in.)
B5	Bin Height - Fully Tipped	5 310 mm	(17 ft. 5 in.)
C	Width Over Mudguards	2 985 mm	(9 ft. 10 in.)
D	Width Over Tyres - Front - 23.5R25	2 998 mm	(9 ft. 10 in.)
E	Width Over Tyres - Rear - 875/65 R29	3 270 mm	(10 ft. 9 in.)
F	Tyre Track Width - Front	2 390 mm	(7 ft. 10 in.)
F	Tyre Track Width - Rear	2 386 mm	(7 ft. 10 in.)
G	Width over Bin	3 383 mm	(11 ft. 2 in.)
G1	Width over Tailgate	3 480 mm	(11 ft. 5 in.)
H	Width over Mirrors - Operating Position	3 260 mm	(10 ft. 9 in.)

I	Ground Clearance - Artic	539 mm	(21.22 in.)
J	Ground Clearance - Front Axle	480 mm	(18.90 in.)
K	Ground Clearance - Bin Fully Tipped	444 mm	(17.50 in.)
L	Bin Lip Height - Transport Position	2 331 mm	(7 ft. 8 in.)
M	Bin Length	4 271 mm	(14 ft.)
N	Load over Height	3 207 mm	(10 ft. 6 in.)
O	Rear Axle Centre to Bin Rear	1 957 mm	(6 ft. 5 in.)
P	Rear Axle Centre to Front Axle Centre	4 560 mm	(14 ft. 12 in.)
Q	Front Axle Centre to Machine Front	2 605 mm	(8 ft. 7 in.)
R	Front Axle Centre to Artic Centre	1 360 mm	(4 ft. 6 in.)
S	Approach Angle	25 °	
T	Maximum Bin Tip Angle	70 °	
U	Maximum Articulation Angle	45 °	
V	Front Tie Down Height	1 040 mm	(3 ft. 5 in.)
W	Machine Lifting Centres	8 126 mm	(26 ft. 8 in.)
X	Inner Turning Circle Radius	3 488 mm	(11 ft. 5 in.)
Y	Outer Turning Circle Radius	7 385 mm	(24 ft. 3 in.)

B30E 4x4

Gradeability/Rimpull

1. Determine tractive resistance by finding intersection of vehicle mass line and grade line. NOTE: 2% typical rolling resistance is already assumed in chart and grade line.
2. From this intersection, move straight right across charts until line intersects rimpull curve.
3. Read down from this point to determine maximum speed attained at that tractive resistance.

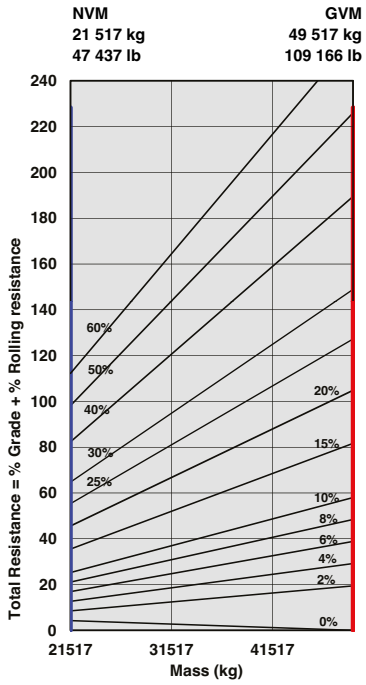

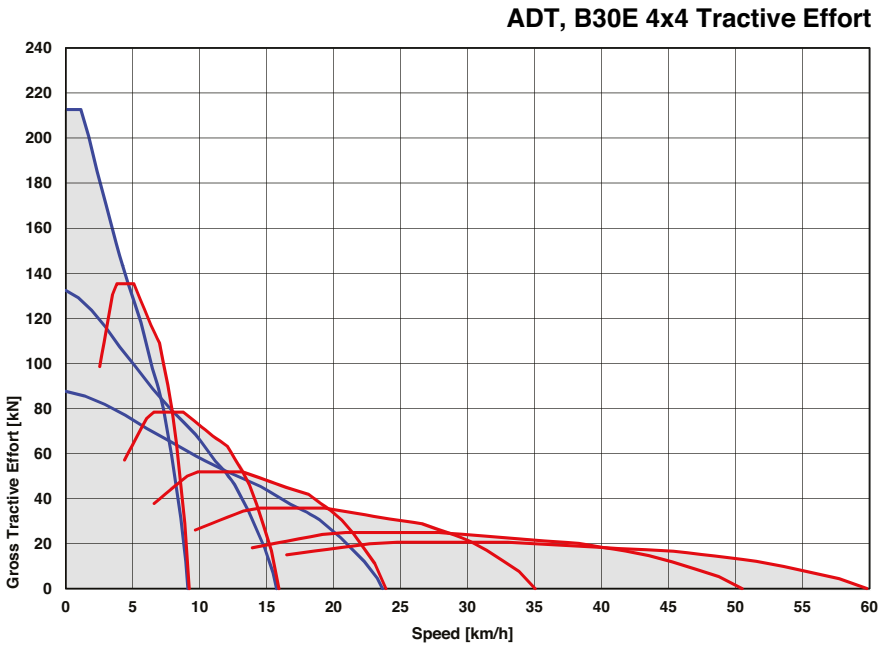

Retardation

1. Determine retardation force required by finding intersection of vehicle mass line.
2. From this intersection, move straight right across charts until line intersects the curve. NOTE: 2% typical rolling resistance is already assumed in chart.
3. Read down from this point to determine maximum speed.

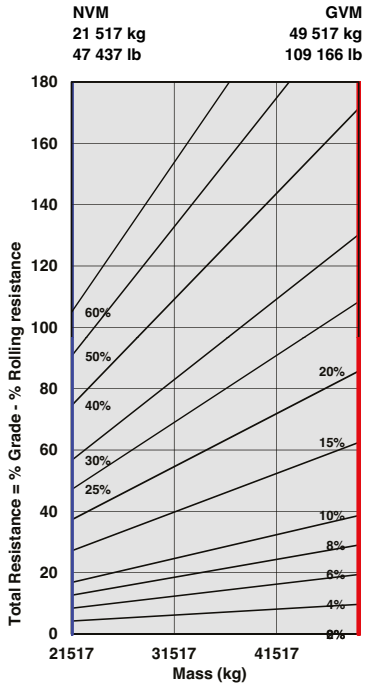

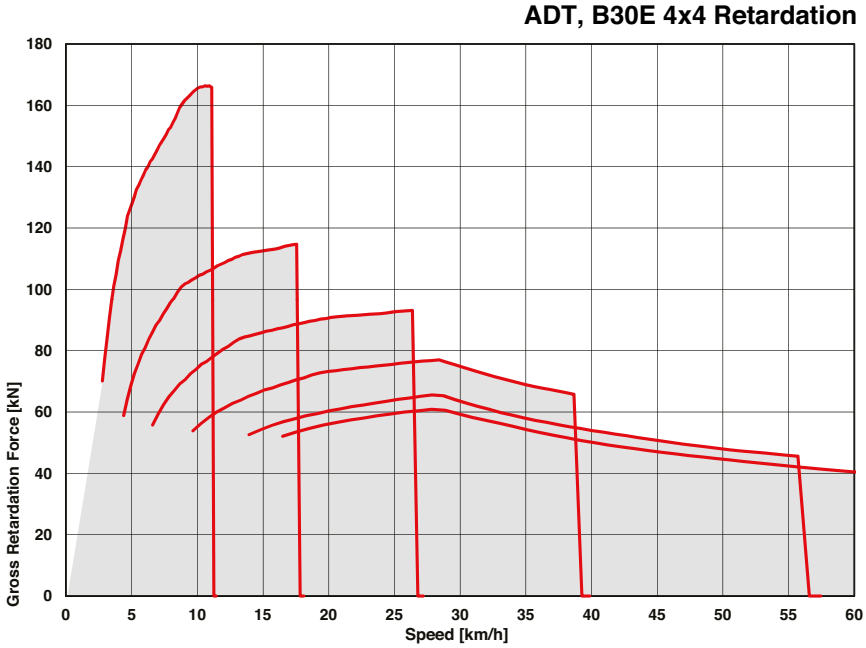

B45E 4x4 Articulated Dump Truck

ENGINE

Manufacturer
Mercedes Benz (MTU)

Model
OM471LA (MTU 6R 1300)

Configuration
Inline 6, turbocharged and intercooled

Maximum Net Power
523 hp (390 kW) at 1,600 rpm in accordance with UN ECE R120

Gross Torque
1,917 lbft (2,600 Nm) @ 1,300 rpm

Displacement
781 cu.in (12.8 liters)

Auxiliary Brake
Jacobs Engine Brake®

Fuel Tank Capacity
93 US gal (352 liters)

AdBlue® Tank Capacity
11 US gal (40 liters)

Certification
OM471LA (MTU 6R 1300) meets EPA Tier 4 Final/Stage V emissions regulations.

TRANSMISSION

Manufacturer
Allison

Model
4700 ORS

Configuration
Fully automatic planetary transmission

Layout
Engine mounted

Gear Layout
Constant meshing planetary gears, clutch operated

Gears
7 Forward, 1 Reverse

Clutch Type
Hydraulically operated multi-disc

Control Type
Electronic

Torque Control
Hydrodynamic with lock-up in all gears

TRANSFER CASE

Manufacturer
Kessler

Series
W2400

Layout
Remote mounted

Gear Layout
Three in-line helical gears

Output Differential
Interaxle 29/71 proportional differential. Automatic inter-axle differential lock.

AXLES

Manufacturer
Bell

Model
Front: Bell 30T
Rear: Kessler D106

Differential
Front: High input controlled traction Differential with spiral bevel gears.

Rear: High input limited slip differential with spiral bevel gears. Traction control functionality provided through speed sensors and brake activation.

Final Drive
Outboard heavy duty planetary on all axles

BRAKING SYSTEM

Service Brake
Dual circuit, full hydraulic actuation wet disc brakes on front and rear axles. Wet brake oil is circulated through a filtration and cooling system.

Maximum brake force:
79,132 lbf (352 kN)

Park & Emergency
Spring applied, air released driveline mounted disc

Maximum brake force:
95,768 lbf (426 kN)

Auxiliary Brake
Automatic Jacobs Engine Brake®. Automatic retardation through electronic activation of wet brake system.

Total Retardation Power
Continuous: 593 hp (442 kW)
Maximum: 1,145 hp (854 kW)

WHEELS

Type
Radial Earthmover

Tire
Front: 775/65 R29
(26.5 R25 optional)
Rear: 21.00 R35 Dual

FRONT SUSPENSION

Semi-independent, leading A-frame supported by hydropneumatic suspension struts.

Active dual springrate Comfort Ride suspension, including height control.

REAR SUSPENSION

Trailing arm cradle supported by hydro-pneumatic suspension struts, with an additional lateral stabilizer.

HYDRAULIC SYSTEM

Full load sensing system serving the prioritized steering, body tipping and brake functions. A ground-driven, load sensing emergency steering pump is integrated into the main system.

Pump Type
Variable displacement load sensing piston

Flow
79 gal/min (300 L/min)

Pressure
4,060 psi (280 Bar)

Filter
5 microns

STEERING SYSTEM

Double acting cylinders, with ground-driven emergency steering pump.

Lock to lock turns
5.5

Steering Angle
42°

DUMPING SYSTEM

Two double-acting, two stage telescopic, dump cylinders

Raise Time
18 s

Lowering Time
16.5 s

Tipping Angle
55° standard, or any lower angle programmable

PNEUMATIC SYSTEM

Air drier with heater and integral unloader valve, serving park brake and auxiliary functions.

System Pressure
117 psi (8.1 Bar)

ELECTRICAL SYSTEM

Voltage
24 V

Battery Type
Two AGM (Absorption Glass Mat) type

Battery Capacity
2 X 75 Ah

Alternator Rating
28V 100A

VEHICLE SPEEDS

1st	2.1 mph	3.5 km/h
2nd	5 mph	8 km/h
3rd	9 mph	15 km/h
4th	13 mph	21 km/h
5th	19 mph	31 km/h
6th	26 mph	42 km/h
7th	30 mph	48 km/h
R	3.7 mph	6 km/h

CAB

ROPS/FOPS certified 77 dBA internal sound level measured according to ISO 6396.

Load Capacity & Ground Pressure

OPERATING WEIGHTS		GROUND PRESSURE		LOAD CAPACITY		OPTION WEIGHTS	
UNLADEN	kg (lb)	LADEN		BODY	m^3 (yd^3)		kg (lb)
Front	17,803 (39,249)	No Sinkage/Total Contact Area		Struck Capacity	19,5 (25.5)	Bin liner	1,022 (2,253)
Rear	15,162 (33,426)	775/65 R29	kPa (Psi)	SAE 2:1 Capacity	25 (32.7)	Tailgate	1,373 (3,026)
Total	32,964 (72,675)	Front	297 (43.1)	SAE 1:1 Capacity	29,5 (38.6)		
				SAE 2:1 Capacity		EXTRA WHEELSET	
LADEN		21.00 R35	kPa (Psi)	with Tailgate	26 (34)	775/65 R29	888 (1,958)
Front	23,362 (51,504)	Rear	405 (58.7)			21.00 R35	1,012 (2,231)
Rear	50,603 (111,561)			Rated Payload	41,000 kg		
Total	73,964 (163,065)				(90,390 lbs)		

B45E Narrow 4x4

Dimensions

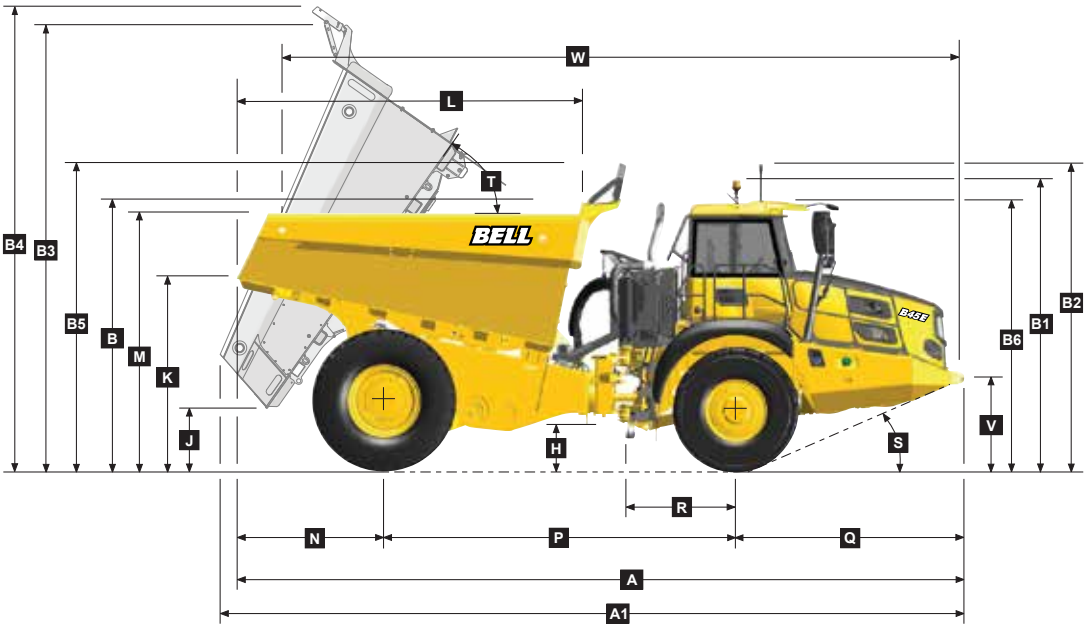

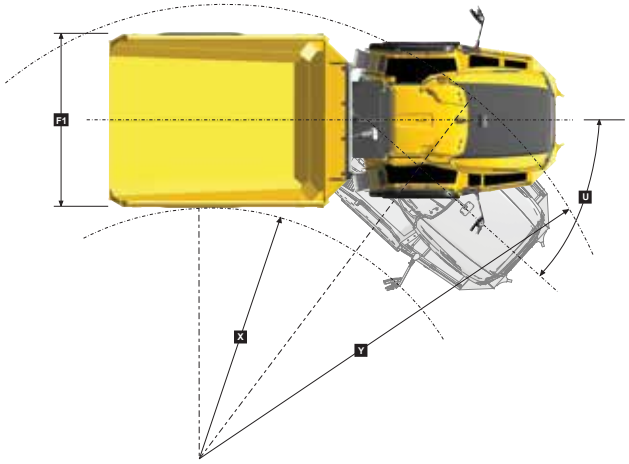



Machine Dimensions

A	Length - Transport Position with Tailgate	10 352 mm (33 ft. 12 in.)
A	Length - Transport Position w/o Tailgate	10 336 mm (33 ft. 11 in.)
A1	Length - Bin Fully Tipped	10 576 mm (34 ft. 8 in.)
B	Height - Transport Position w/o Rock Guard	3 874 mm (12 ft. 9 in.)
B	Height - Transport Position with Rock Guard	4 374 mm (14 ft. 4 in.)
B1	Height - Rotating Beacon	4 038 mm (13 ft. 3 in.)
B2	Height - Load Light	4 127 mm (13 ft. 6 in.)
B3	Bin Height - Fully Tipped w/o Rock Guard	6 327 mm (20 ft. 9 in.)
B4	Bin Height - Fully Tipped with Rock Guard	6 585 mm (21 ft. 7 in.)
B5	Height - Rock Guard Operating Position	4 374 mm (14 ft. 4 in.)
B6	Height - Cab	3 802 mm (12 ft. 6 in.)
C	Width over Mudguards	3 603 mm (11 ft. 10 in.)
D	Width over Front Tyres 775/65R29	3 556 mm (11 ft. 8 in.)
D1	Width over Front Tyres 26.5R25	3 425 mm (11 ft. 3 in.)
D	Width over Rear Tyres 21.00R35	3 960 mm (12 ft. 12 in.)
E	Tyre Track Width Front 775/65R29	2 905 mm (9 ft. 6 in.)
E1	Tyre Track Width Front 26.5R25	2 793 mm (9 ft. 2 in.)
E	Tyre Track Width Rear 21.00R35	2 677 mm (8 ft. 9 in.)
F	Width over Bin	3 960 mm (12 ft. 12 in.)
F1	Width over Tailgate	4 275 mm (14 ft.)
G	Width over Mirrors - Operating Position	5 184 mm (17 ft.)
H	Ground Clearance - Artic	545 mm (21,5 in.)
I	Ground Clearance - Front Axle	543 mm (21,4 in.)
J	Ground Clearance - Bin Fully Tipped	879 mm (34,6 in.)
K	Bin Lip Height - Transport Position	2 618 mm (8 ft. 7 in.)
L	Bin Length	4 913 mm (16 ft. 1 in.)
M	Load over Height	3 671 mm (12 ft.)
N	Rear Axle Centre to Bin Rear	2 084 mm (6 ft. 10 in.)
P	Rear Axle Centre to Front Axle Centre	5 000 mm (16 ft. 5 in.)
Q	Front Axle Centre to Machine Front	3 256 mm (10 ft. 8 in.)
R	Front Axle Centre to Artic Centre	1 558 mm (5 ft. 1 in.)
S	Approach Angle	24 °
T	Maximum Bin Tip Angle	55 °
U	Maximum Articulation Angle	42 °
V	Front Tie Down Height	1 262 mm (4 ft. 2 in.)
W	Machine Lifting Centres	9 697 mm (31 ft. 10 in.)
X	Inner Turning Circle Radius	3 956 mm (12 ft. 12 in.)
Y	Outer Turning Circle Radius	8 655 mm (28 ft. 5 in.)

B45E Wide 4x4

Dimensions

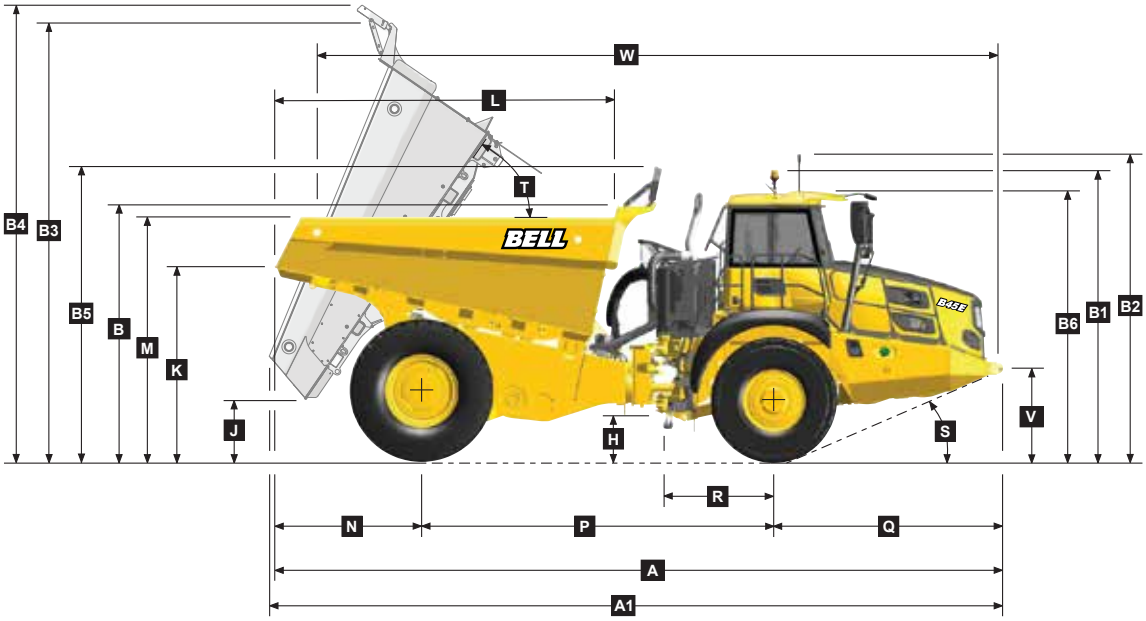

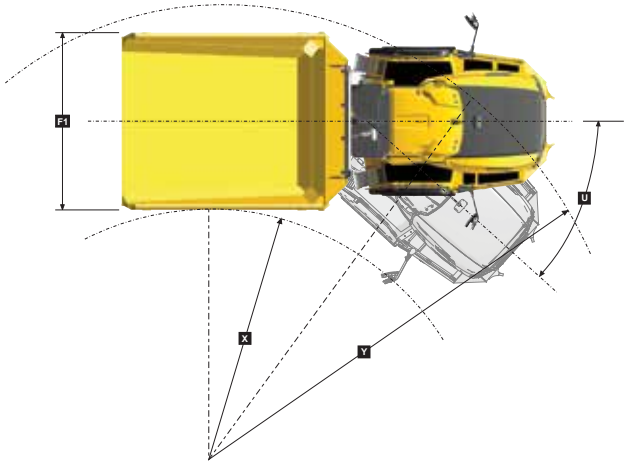



Machine Dimensions

A	Length - Transport Position with Tailgate	10 405 mm (34 ft. 2 in.)
A	Length - Transport Position w/o Tailgate	10 339 mm (33 ft. 11 in.)
A1	Length - Bin Fully Tipped	10 427 mm (34 ft. 3 in.)
B	Height - Transport Position w/o Rock Guard	3 703 mm (12 ft. 2 in.)
B	Height - Transport Position with Rock Guard	4 176 mm (13 ft. 8 in.)
B1	Height - Rotating Beacon	4 038 mm (13 ft. 3 in.)
B2	Height - Load Light	4 127 mm (13 ft. 6 in.)
B3	Bin Height - Fully Tipped w/o Rock Guard	6 228 mm (20 ft. 5 in.)
B4	Bin Height - Fully Tipped with Rock Guard	6 485 mm (21 ft. 3 in.)
B5	Height - Rock Guard Operating Position	4 206 mm (13 ft. 10 in.)
B6	Height - Cab	3 802 mm (12 ft. 6 in.)
C	Width over Mudguards	4 000 mm (13 ft. 1 in.)
D	Width over Front Tyres 775/65R29	3 556 mm (11 ft. 8 in.)
D1	Width over Front Tyres 26.5R25	3 425 mm (11 ft. 3 in.)
D	Width over Rear Tyres 21.00R35	3 960 mm (12 ft. 12 in.)
E	Tyre Track Width Front 775/65R29	2 905 mm (9 ft. 6 in.)
E1	Tyre Track Width Front 26.5R25	2 793 mm (9 ft. 2 in.)
E	Tyre Track Width Rear 21.00R35	2 677 mm (8 ft. 9 in.)
F	Width over Bin	4 265 mm (13 ft. 12 in.)
F1	Width over Tailgate	4 639 mm (15 ft. 3 in.)
G	Width over Mirrors - Operating Position	5 184 mm (17 ft.)
H	Ground Clearance - Artic	545 mm (21.5 in.)
I	Ground Clearance - Front Axle	543 mm (21.4 in.)
J	Ground Clearance - Bin Fully Tipped	890 mm (35 in.)
K	Bin Lip Height - Transport Position	2 630 mm (8 ft. 8 in.)
L	Bin Length	4 833 mm (15 ft. 10 in.)
M	Load over Height	3 485 mm (11 ft. 5 in.)
N	Rear Axle Centre to Bin Rear	2 084 mm (6 ft. 10 in.)
P	Rear Axle Centre to Front Axle Centre	5 000 mm (16 ft. 5 in.)
Q	Front Axle Centre to Machine Front	3 256 mm (10 ft. 8 in.)
R	Front Axle Centre to Artic Centre	1 558 mm (5 ft. 1 in.)
S	Approach Angle	24 °
T	Maximum Bin Tip Angle	55 °
U	Maximum Articulation Angle	42 °
V	Front Tie Down Height	1 262 mm (4 ft. 2 in.)
W	Machine Lifting Centres	9 673 mm (31 ft. 9 in.)
X	Inner Turning Circle Radius	3 956 mm (12 ft. 12 in.)
Y	Outer Turning Circle Radius	8 655 mm (28 ft. 5 in.)

Gradeability/Rimpull

1. Determine tractive resistance by finding intersection of vehicle mass line and grade line. NOTE: 2% typical rolling resistance is already assumed in chart and grade line.
2. From this intersection, move straight right across charts until line intersects rimpull curve.
3. Read down from this point to determine maximum speed attained at that tractive resistance.

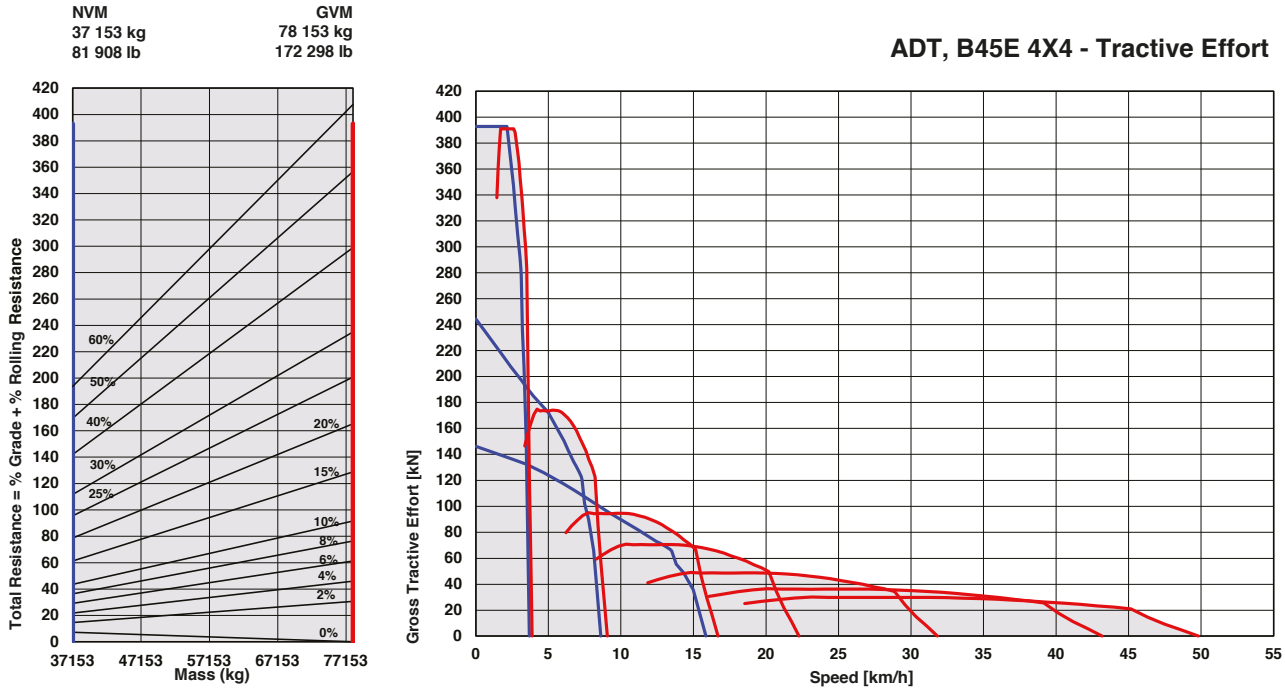

Retardation

1. Determine retardation force required by finding intersection of vehicle mass line.
2. From this intersection, move straight right across charts until line intersects the curve. NOTE: 2% typical rolling resistance is already assumed in chart.
3. Read down from this point to determine maximum speed.

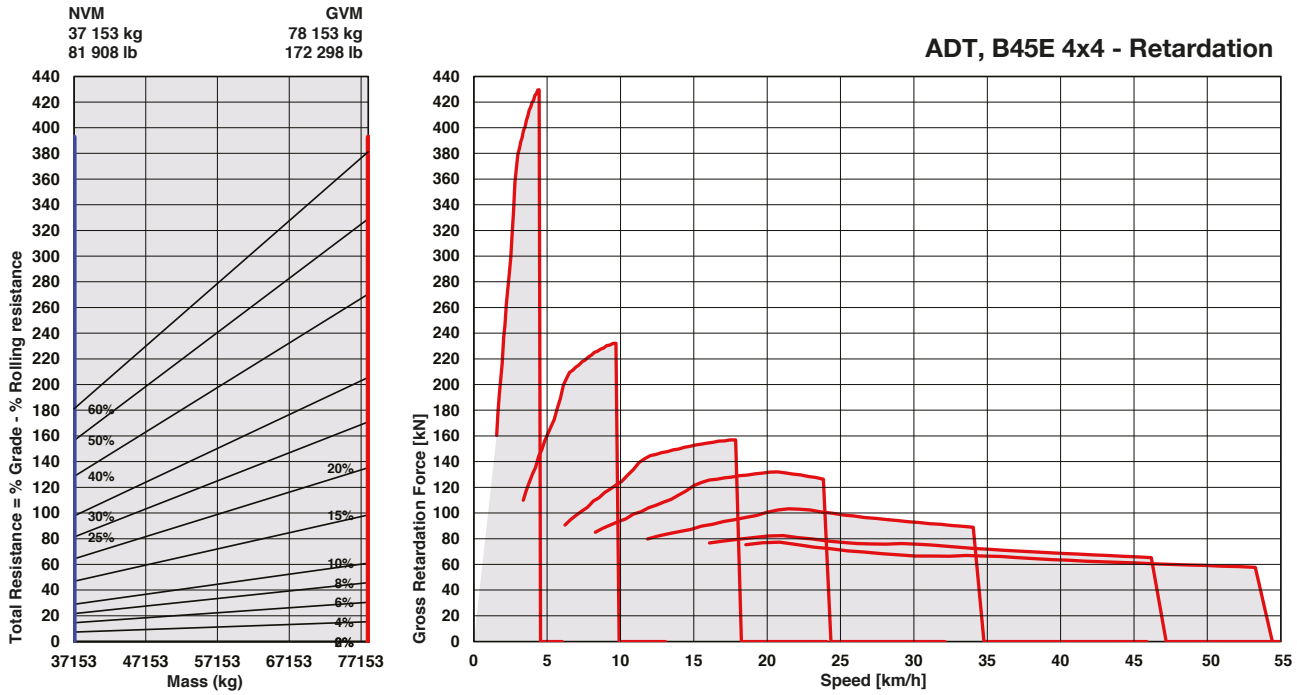

B60E 4x4 Articulated Dump Truck

ENGINE

Manufacturer
Mercedes Benz (MTU)

Model
OM473LA (MTU 6R 1500)

Configuration
Inline 6, turbocharged and intercooled

Maximum Net Power
577 hp (430 kW) at 1,600 rpm in accordance with UN ECE R120

Gross Torque
2,102 lbft (2,850 Nm) @ 1,300 rpm

Displacement
952 cu.in (15.6 liters)

Auxiliary Brake
Jacobs Engine Brake®

Fuel Tank Capacity
130 US gal (494 liters)

AdBlue® Tank Capacity
11 US gal (40 liters)

Certification
OM473LA (MTU 6R 1500) meets EPA Tier 4 Final/Stage V emissions regulations.

TRANSMISSION

Manufacturer
Allison

Model
4800 ORS

Configuration
Fully automatic planetary transmission

Layout
Engine mounted

Gear Layout
Constant meshing planetary gears, clutch operated

Gears
7 Forward, 1 Reverse

Clutch Type
Hydraulically operated multi-disc

Control Type
Electronic

Torque Control
Hydrodynamic with lock-up in all gears

TRANSFER CASE

Manufacturer
Kessler

Series
W2400

Layout
Remote mounted

Gear Layout
Three in-line helical gears

Output Differential
Interaxle 29/71 proportional differential. Automatic inter-axle differential lock.

AXLES

Manufacturer
Front - Bell
Rear - Kessler

Model
Front: 30T
Rear: 71T

Differential
Front: High input controlled traction differential with spiral bevel gears.

Rear: High input limited slip differential with spiral bevel gears. Traction control functionality provided through speed sensors and brake activation.

Final Drive
Outboard heavy duty planetary on all axles

BRAKING SYSTEM

Service Brake
Dual circuit, full hydraulic actuation wet disc brakes on front and rear axles. Wet brake oil is circulated through a filtration and cooling system.

Maximum brake force:
100,264 lbf (446 kN)

Park & Emergency
Spring applied, air released driveline mounted disc

Maximum brake force:
76,659 lbf (341 kN)

Auxiliary Brake
Jacobs Engine Brake®. Automatic retardation through electronic activation of wet brake system.

Total Retardation Power
Continuous: 770 hp (574 kW)
Maximum: 1,318 hp (983 kW)

WHEELS

Type
Radial Earthmover

Tire
Front: 875/65 R29
Rear: Twin 24.00 R35

FRONT SUSPENSION

Semi-independent, leading A-frame supported by hydro-pneumatic suspension struts

Active dual springrate Comfort Ride suspension, including height control.

REAR SUSPENSION

Trailing arm cradle supported by hydro-pneumatic suspension struts, with an additional lateral stabilizer.

HYDRAULIC SYSTEM

Full load sensing system serving the prioritized steering, body tipping, suspension and brake functions. A ground-driven, load sensing emergency steering pump is integrated into the main system.

Pump Type
Variable displacement load sensing piston

Flow
87 gal/min (330 L/min)

Pressure
4,060 psi (280 bar)

Filter
5 microns

STEERING SYSTEM

Double acting cylinders, with ground-driven emergency steering pump.

Lock to lock turns
5.5

Steering Angle
42°

DUMPING SYSTEM

Two double-acting, two stage telescopic, dump cylinders

Raise Time
18 seconds

Lowering Time
16.5 seconds

Tipping Angle
55° standard, or any lower angle programmable

PNEUMATIC SYSTEM

Air drier with heater and integral unloader valve, serving park brake and auxiliary functions.

System Pressure
117 psi (8.1 Bar)

ELECTRICAL SYSTEM

Voltage
24 V

Battery Type
Two AGM (Absorption Glass Mat) type

Battery Capacity
2 X 75 Ah

Alternator Rating
28V 100A

MAX. VEHICLE SPEED

1st	2.5 mph	4 km/h
2nd	5.6 mph	8 km/h
3rd	10.6 mph	16 km/h
4th	13.7 mph	21 km/h
5th	20 mph	30 km/h
6th	27 mph	41 km/h
7th	32 mph	47 km/h
R	4 mph	6 km/h

CAB

ROPS/FOPS certified 77 dBA internal sound level measured according to ISO 6396.

Load Capacity & Ground Pressure

OPERATING WEIGHTS		GROUND PRESSURE		LOAD CAPACITY		OPTION WEIGHTS	
UNLADEN	**kg (lb)**	**LADEN**		**BODY**	**m^3 (yd^3)**		**kg (lb)**
Front	20,643 (45,510)	**(No sinkage/**		Struck Capacity	27 (35.3)	Bin liner	1,117 (2,463)
Rear	22,235 (49,020)	**Total Contact Area Method)**		SAE 2:1 Capacity	35 (45.8)	Tailgate	1,512 (3,333)
Total	42,878 (94,530)	**875/65 R29**	**kPa (Psi)**	SAE 1:1 Capacity	42 (55)		
		Front	333 (48.2)	SAE 2:1 Capacity		**EXTRA WHEELSET**	
LADEN				with Tailgate	36 (47)	875/65 R29	1,338 (2,950)
Front	27,243 (60,061)	**24.00 R35**	**kPa**			24.00 R35	1,240 (2,734)
Rear	70,635 (155,724)	Rear	478 (69.3)	Rated Payload	55,000 kg		
Total	97,878 (215,785)				(121,254 lb)		

Dimensions

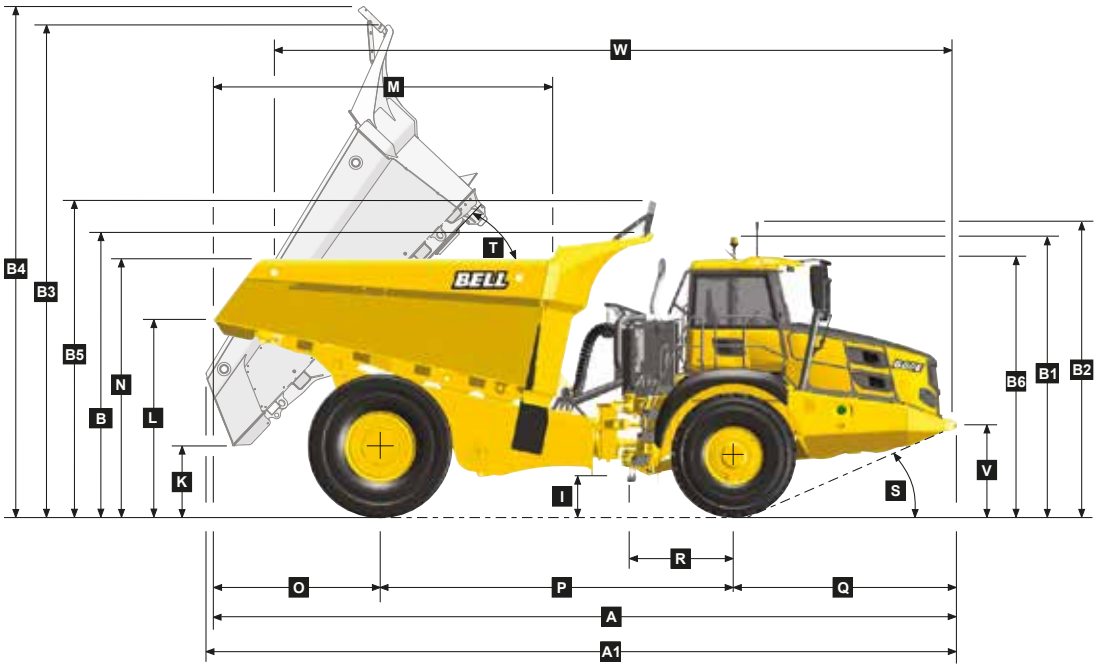

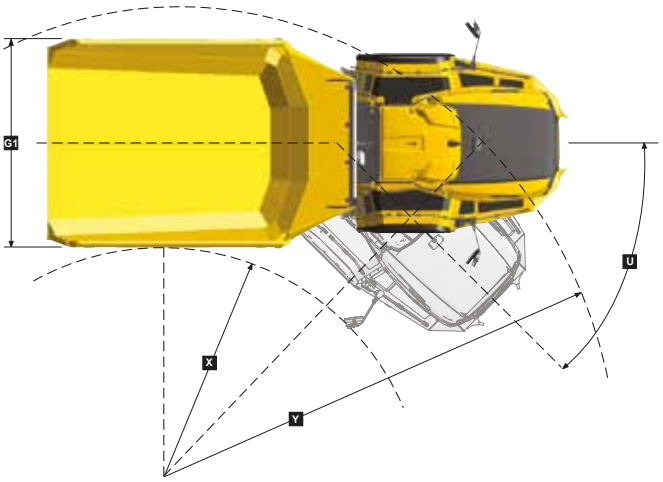



Machine Dimensions

A	Length - Transport Position	11 114 mm	(36 ft. 6 in.)	I	Ground Clearance - Artic	561 mm	(22.09 in.)
A1	Length - Bin Fully Tipped	11 189 mm	(36 ft. 9 in.)	J	Ground Clearance - Front Axle	554 mm	(21.81 in.)
B	Height - Transport Position w/o Rock Guard	4 191 mm	(13 ft. 9 in.)	K	Ground Clearance - Bin Fully Tipped	852 mm	(34 in.)
B	Height - Transport Position with Rock Guard	4 206 mm	(13 ft. 10 in.)	L	Bin Lip Height - Transport Position	2 954 mm	(9 ft. 8 in.)
B1	Height - Rotating Beacon	4 112 mm	(13 ft. 6 in.)	M	Bin Length	5 041 mm	(16 ft. 6 in.)
B2	Height - Load Light	4 335 mm	(14 ft. 3 in.)	N	Load over Height	3 833 mm	(12 ft. 7 in.)
B3	Bin Height - Fully Tipped w/o Rock Guard	7 402 mm	(24 ft. 3 in.)	O	Rear Axle Centre to Bin Rear	2 477 mm	(8 ft. 2 in.)
B4	Bin Height - Fully Tipped with Rock Guard	7 625 mm	(25 ft.)	P	Rear Axle Centre to Front Axle Centre	5 285 mm	(17 ft. 4 in.)
B5	Height - Rock Guard Operating Position	4 669 mm	(15 ft. 4 in.)	Q	Front Axle Centre to Machine Front	3 352 mm	(10 ft. 12 in.)
B6	Height - Cab	3 813 mm	(12 ft. 6 in.)	R	Front Axle Centre to Artic Centre	1 558 mm	(5 ft. 1 in.)
C	Width over Mudguards	3 790 mm	(12 ft. 5 in.)	S	Approach Angle	22 °	
D	Width over Tyres - Front - 875/65 R29	3 832 mm	(12 ft. 7 in.)	T	Maximum Bin Tip Angle	55 °	
E	Width over Tyres - Rear - 24.00R35	4 444 mm	(14 ft. 7 in.)	U	Maximum Articulation Angle	42 °	
F	Tyre Track Width - Front	2 949 mm	(9 ft. 8 in.)	V	Front Tie Down Height	1 263 mm	(4 ft. 2 in.)
F	Tyre Track Width - Rear	2 992 mm	(9 ft. 10 in.)	W	Machine Lifting Centres	10 116 mm	(33 ft. 2 in.)
G	Width over Bin	4 487 mm	(14 ft. 9 in.)	X	Inner Turning Circle Radius	4 246 mm	(13 ft. 11 in.)
G1	Width over Tailgate	4 800 mm	(15 ft. 9 in.)	Y	Outer Turning Circle Radius	9 216 mm	(30 ft. 3 in.)
H	Width over Mirrors - Operating Position	5 283 mm	(17 ft. 4 in.)				

B60E 4x4

Gradeability/Rimpull

1. Determine tractive resistance by finding intersection of vehicle mass line and grade line. NOTE: 2% typical rolling resistance is already assumed in chart and grade line.
2. From this intersection, move straight right across charts until line intersects rimpull curve.
3. Read down from this point to determine maximum speed attained at that tractive resistance.

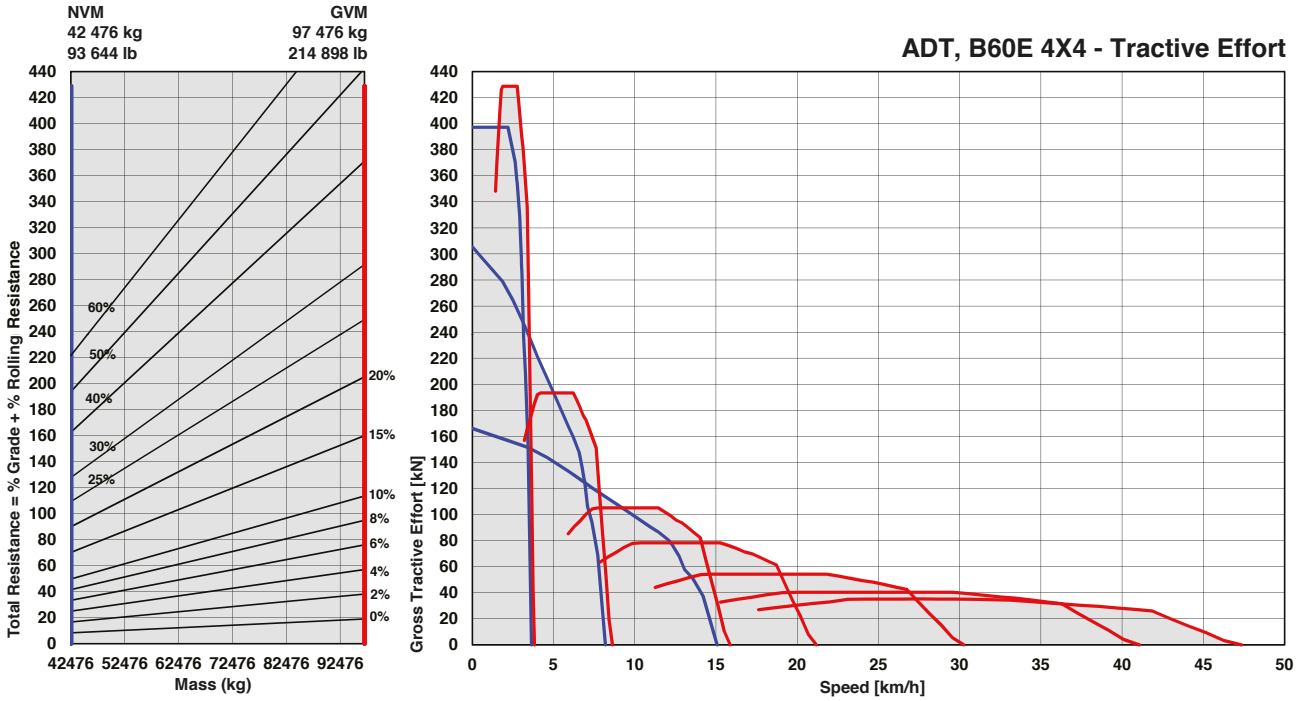

Retardation

1. Determine retardation force required by finding intersection of vehicle mass line.
2. From this intersection, move straight right across charts until line intersects the curve. NOTE: 2% typical rolling resistance is already assumed in chart.
3. Read down from this point to determine maximum speed.

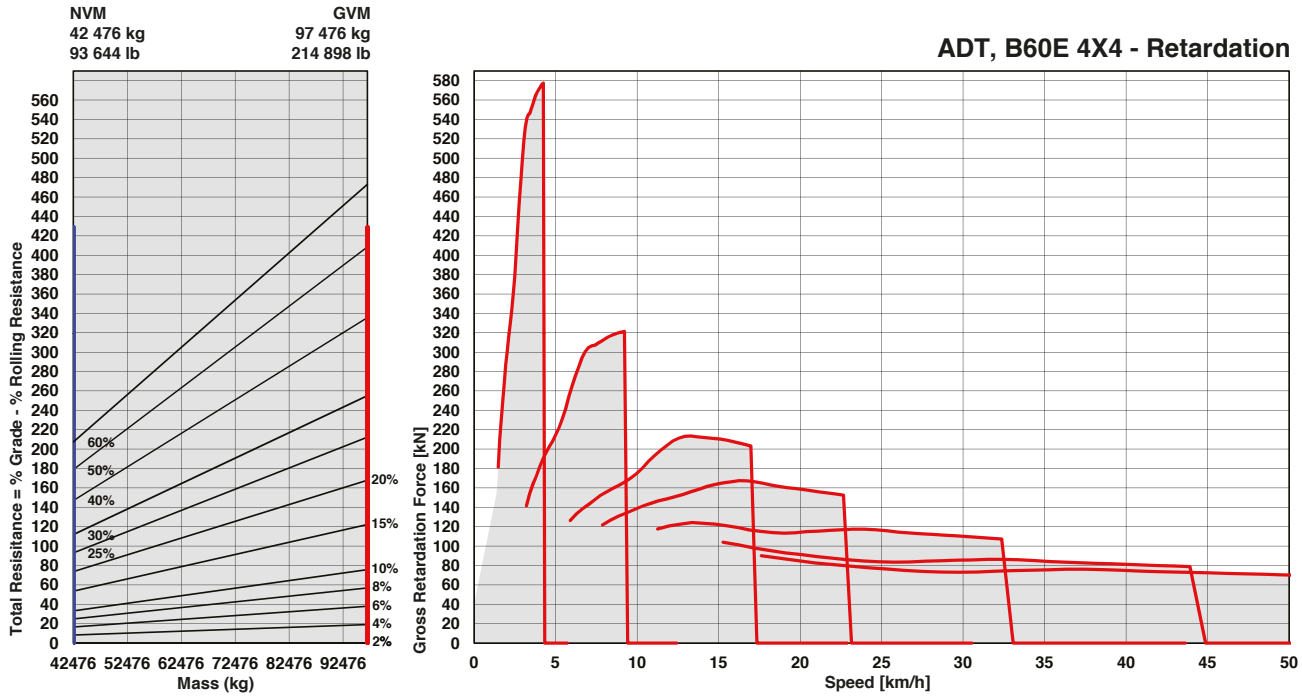

Features and Options

● STANDARD ▲ OPTION

B30E 4x4	B45E 4x4	B60E 4x4	
			ENGINE
●	●	●	Jacobs Engine Brake®
●	●	●	Dual element air cleaner with dust ejector valve
●	●	●	Pre-cleaner with automatic dust scavenging
●	●	●	Water separator
●	●	●	Serpentine drive belt with automatic tensioner
●	●	●	Provision for fast fill
	●	●	Wet-sleeve cylinder liners
			COOLING
●	●	●	Crankshaft mounted electronically controlled viscous fan drive
●	●	●	Fan guard
			PNEUMATIC SYSTEM
●	●	●	Engine-mounted compressor
●	●	●	Air drier with heater
●	●	●	Integral unloader valve
			ELECTRICAL SYSTEM
●	●	●	Battery disconnect
●	●		Halogen drive lights
	▲	●	LED drive lights
●	●	●	Air horn
●	●	●	Reverse alarm
▲	▲	▲	White noise reverse alarm
●	●	●	Rotating beacon
●	●	●	Pitch roll sensor
▲	▲	●	LED Artic reverse light
●	●		Halogen artic reverse lights
●	●	●	LED reverse lights
			STEERING SYSTEM
●	●	●	Bi-directional ground-driven secondary steering pump
			CAB
●	●	●	ROPS/FOPS certification
●	●	●	Tilt cab
●	●	●	Gas strut-supported door
●	●	●	I-Tip programmable dump-body tip settings
●	●	●	HVAC Climate control system
●	●	●	AM/FM radio with Aux + USB
●	●	●	Rear window guard
●	●	●	Wiper/washer with intermittent control
●	●	●	Tilt and telescoping steering wheel
●	●	●	Center-mount air-suspension seat
●	●		Halogen work lights
▲	▲	●	LED work lights
▲	▲	▲	Rotating beacon: seat belt installation
▲	▲	▲	Remote engine and machine isolation
●	●	●	Remote battery jump start
●	●	●	Retractable 3 point seat belt
●	●	●	Heated seat
●	●	●	Foldaway trainer seat with retractable seat belt
●	●	●	12-volt power outlet
●	●	●	Cab utility bin (removable)
●	●	●	Cup holder
●	●	●	Cooled/heated lunch box
		▲	Heated mirrors
●	●	●	Mirrors, Electrically Adjusted and Heated

B30E 4x4	B45E 4x4	B60E 4x4	
			CAB (continued)
●	●	●	Deluxe 10" color LCD: Speedometer / Fuel gauge / Transmission oil temperature gauge / Engine coolant temperature gauge / LED function/warning indicators and audible alarm / Transmission gear selection / Tachometer / Battery voltage / Hour meter / Odometer / Fuel consumption / Tip counter / Trip timer / Trip distance / Metric/English units / Service codes/diagnostics
●	●	●	Backlit sealed switch module functions with: Wiper control / Lights / Heated mirrors / Retarding aggressiveness / Transfer case differential lock / Transmission gear hold / Dump-body tip limit / Automatic dump-body tip settings / Air conditioner/ Heater controls / Preselected Speed Control
			DUMP BODY
●	●	●	Dump body mechanical lock
▲	▲	▲	Partial body liner
▲	▲	▲	Tailgate
▲	▲	▲	Body heater
	▲	▲	Bin pole lockout
	▲		Narrow bin body
	●	●	Rear wheel mudguards
	▲	▲	Rear wheel bin rock guards
			OTHER
●	●	●	Automatic Traction Control (ATC)
●	●	●	Wet disc brakes
●			23.5 R25 Radial Earthmover tires (Front)
	●		775/65 R29 Radial Earthmover tires (Front)
		●	875/65 R29 Radial Earthmover tires (Front)
	▲		26.5 R25 Radial Earthmover tires (Front-optional)
●			875/65 R29 Radial Earthmover tires (Rear)
	●		21.00 R35 Dual (Rear)
		●	24.00 R35 Dual (Rear)
●	●		Remote grease banks
▲	●	●	Automatic greasing
●	●	●	Onboard Weighing
▲	▲	●	Load lights: stack
●	●	●	Comfort ride suspension (Front)
	●	●	Hydro-pneumatic suspension (Rear)
▲	●	●	Reverse camera
●	●	●	Hand rails
●	●	●	Cab peak
●	●	●	High pressure hydraulic filter
▲	▲	▲	Fuel heater
●	●	●	Belly cover
●	●	●	Cross member cover
▲	▲	●	Remote transmission filters
●	●	●	Engine and transmission remote drain-gravity
		▲	Engine and transmission remote drain-scavenge
▲	▲	▲	Window smash button
●	●	●	High visibility mirrors
●	●	●	Fleetm@tic® Classic Package for 5 years
●	●	●	Electronic bonnet opening
▲	▲	▲	Engine oil quick drain connector

Notes



All dimensions are shown in millimeters, unless otherwise stated between brackets. Under our policy of continuous improvement, we reserve the right to change technical data and design without prior notice. Photographs featured in this brochure may include optional equipment. Blu@dvantage™ is a trademark of Bell Equipment Co. (PTY) Ltd. AdBlue® is a registered trademark of VDA.

• A632E30 • A647E30 • A660E30

BELL INTERNATIONAL - Tel: +27 (0)35-907 9297
E-mail: connect@bellequipment.com • www.bellequipment.com

Tel: +61 (0)8-9355-2442
Tel: +49 (0)6631 / 91-13-0
Tel: +33 (0)5-55-89-23-56
Tel: +27 (0)11-928-9700
Tel: +44 (0)1283-712862
Tel: +1 (854) 855 7507

Strong Reliable Machines
Strong Reliable Support

BELL

2537_4x4 ADT_PIN3.6_Tier 4 Final_Broch1225_US English