Timber Trucks

Long Range Forwarders: TF302E | TF403E

Timber Haulers: TH302E | TH302E HP | TH403E



Built on strong foundation

Your business is our business. Bell Timber Trucks haul more, for longer at the lowest cost-per-tonne to deliver more on your profit margins.

As a global leader in articulated dump trucks, Bell Equipment brings you the world class E-series range of timber truck. These evolutionary vehicles are packed with class-leading features that deliver production boosting payloads, lower daily operating costs, superior ride quality and uncompromised safety standards.

Bell Timber Trucks will give your business the competitive edge you need.

Specifications	TF302E Forwarder	TF403E Forwarder	TH302E Hauler	TH302E HP Hauler	TH403E Hauler
Engine	205 kW	240 kW	205 kW	240 kW	240 kW
Tyres	23.5R25	23.5R25	23.5R25	23.5R25	23.5R25
Axle Width	2 963 mm	2 963 mm	2 963 mm	2 963 mm	2 963 mm
Max speed	50 km/h	50 km/h	50 km/h	50 km/h	50 km/h
Base machine	B25E	B30E	B25E	B30E	B30E



• Extensive use of high strength, lightweight materials give these timber trucks the best payload-to-mass ratios and hauling efficiencies in each class.

• Fuel-efficient emission-certified engines deliver clean power without compromise in all conditions. Leading-edge emissions technology ensures rapid engine response and dependable cold-start performance.

• The redesigned sound-suppressed cab features fatigue-beating controls, an advanced diagnostic monitor and a sealed switch module for convenient, fingertip operation of numerous functions.

• With their oscillating frame and high-flotation tyres, Bell Timber Trucks won't leave you stuck on muddy, rutted or hilly terrain.

The E-series range takes Bell Timber Truck functionality to new industry standards, with customer-focused enhancements and the highest level of automated machine protection available.

Through substantial investments in research and development and employing industry-leading technology, advancements in the key areas of performance and fuel efficiency help you to move more material at lower operating costs and environmental impact.

The right choice

As a global leader in the manufacture, distribution and support of material handling equipment, Bell Equipment brings you the world class timber truck.

The ergonomically designed cab is packed with the latest automotive technology and state-of-the-art tooling to enhance the operator's experience.

• Rotating seat in the Bell Forwarder cab enables the operator to drive the timber truck and easily load and offload material from the comfort and safety of the cab.

Designed with safety and ease of operation in mind; safety critical operations, such as the park brake and crane functions, are automatically applied or limited in unsafe conditions. Automatic traction control (ATC) is achieved through the automatic application of the inter-axle differential lock (IDL) while driving.

Bell Timber Trucks leverage the advanced design of our international class-leading ADT providing high reliability and efficiency.

Wherever in the world you take your timber truck, you can be guaranteed of Bell Equipment's technical support, which is offered through the company's network of dealers.

Reliable braking is of paramount importance within the timber industry. The combination of innovative solutions complementing our industry-leading braking design provides the best-in-class braking system.

• Dual-circuit hydraulically actuated wet disc brakes deliver consistent "on-the-mark" braking, even in cold weather and steep slopes.

• Class-leading engine braking and automated transmission retardation deliver superior braking power and reduce service brake wear.

• For comfortable productivity the A-frame suspension system coupled with hydropneumatic suspension struts reduce the lateral vibration often experienced with off-road conditions. A superior suspension seat provides additional isolation for the operator.

• Rough terrain demands tough suspensions. Heavy-duty components absorb shocks and come back for more while providing you with superior suspension travel and ground clearance.

• The wide track width ensures reliable stability while loading.

Difference between TF & TH

The Bell TF302 and TF403 are timber forwarding machines that have the same chassis and powerhead as the TH302 and TH403, which are timber hauling machines.

Important differences:
Bell **Timber Haulers (TH)** are standard trucks based on the Bell ADT (Articulated Dump Truck) customised to carry 30 m^3 (TH302) and 40 m^3 (TH403) of timber respectively.

Whereas Bell **Timber Forwarders (TF)** are equipped with a crane, log grapple, and operator cabin that facilitates a 180 degree rotating seat with arm-rest mounted joysticks, so that the TF range are self on-and-off loading.





Why is this important?
The TH range of trucks require a second machine to load and offload the truck.

The TF range can load from:
- Itself to the stockpile,
- Itself to a long-distance hauler,
- Stockpile to itself
- Stockpile to another hauler

This makes it perfect in heavy pressure situations where there may not be a loader immediately available.

Oscillation and articulation

What are the benefits?

Articulation creates tighter turning circles and, coupled with oscillation, all wheels are constantly in contact with the ground, providing superior traction.

In addition, oscillation contributes to the suspension of the machines and in the worst case of a load capsizing, the front end stays upright, keeping the operator safe.

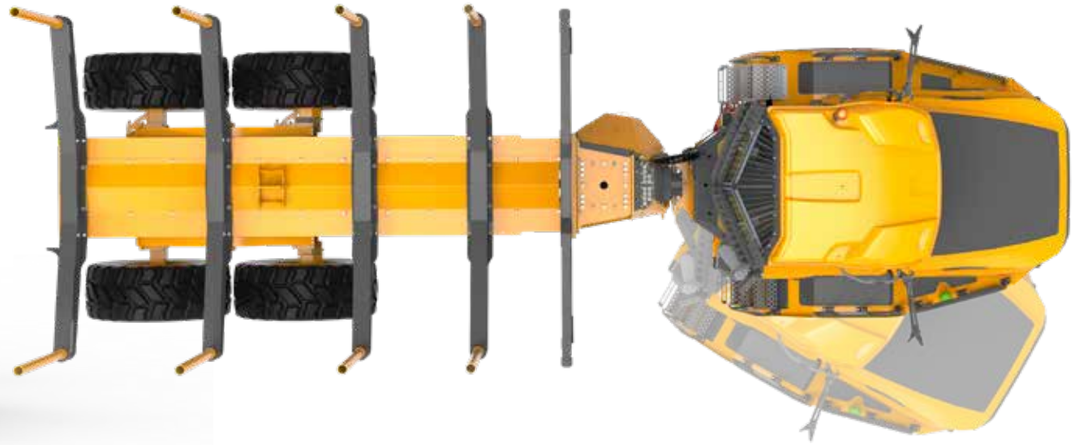



Articulation
When the vehicle turns, the front and rear chassis hinge on a centre joint.

Oscillation
The front and rear chassis can roll side to side independently.

Operate with ease

Using the latest in automotive technology and state-of-the-art tooling, Bell Timber Trucks take the operator experience to new heights.

You will feel right at home in the climate-controlled cab of a Bell Timber Truck. The quiet, spacious interior and ergonomically positioned operator station is packed with productivity-boosting comfort and convenience features that minimise operator fatigue and enhance the operator's experience.

Modern flowing lines, in keeping with current styling trends on road vehicles, offer exceptional visibility.

From the state-of-the-art 10-inch full-colour screen with an automotive-style mouse interface and sealed switch module to the air suspension seat, tilt-and-telescopic steering wheel and optional radio with high-output speakers, these trucks provide everything your operators need to perform at their best.

- The standard sound-suppression package significantly reduces noise levels and operator fatigue.
- The adaptive transmission control adjusts clutch engagement to ensure smooth, consistent shifts throughout the life of the truck.
- A fully adjustable air-suspension seat with variable damping, automatic height adjustment according to the operator's weight, pneumatic lumbar support and a multipoint harness deliver class-leading comfort and safety.
- A purpose designed HVAC system with automotive-style louvres keeps the glass clear and the cab comfortable.
- A rear sky roof, full glass access door, high-visibility mirrors and modern styling all enhance cab visibility.
- You won't find retarder pedals or levers in a Bell Timber Truck. Retarder aggressiveness is simply set on the switch pad. Everything else is automatic.





Easy-to-understand instruments and intuitive controls wrap around the operator so they're easier to view and operate.

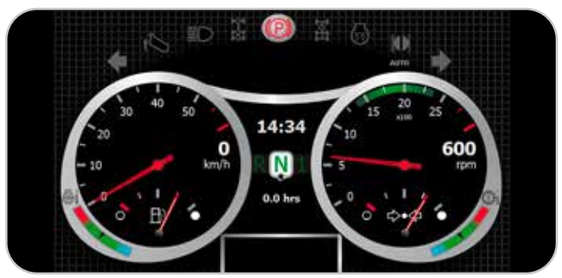

A user-friendly 10-inch colour monitor offers vital operating information, safety warnings, detailed diagnostic readings and dump body function settings.



The display controller enables menu navigation on the monitor to extract information on machine operation and adjust machine settings.



Convenient rear-facing controls provide fingertip reach of numerous productivity enhancing functions including:
• Crane sensitivity adjustment on the fly to match operational requirements • Retarder aggressiveness
• Speed control • Diff lock • Climate control • Start/stop
• Drive selector and crane activation

Safety, our business too

By listening to users and delivering on expectations in an ever-changing workplace, we provide a truck that leads in application safety with numerous groundbreaking innovations.

Independent features such as keyless start, hill assist, auto park application (APA), standard turbo spin protection and gear lock with manual shift mode are provided standard on our timber truck.

For improved safety and productivity, the timber truck has an electronically controlled automatic inter-axle differential lock (IDL) giving the vehicle full automatic traction control (ATC).



The incorporation of a pitch-and-roll sensor in the vehicle engages uphill/ downhill assist.



An integrated reverse camera and high-visibility mirrors provide superior all-round visibility.



Keyless start, driver identity and access codes ensure no unauthorised operation of your equipment.



Our operator cabins are ROPS/FOPS certified. The trainer seat has a retractable lap belt while the operator seat has a standard three-point seat belt. Both seats have automatically locking retractors.

- Full handrails (to ISO 2876) can be installed to offer improved safety when performing engine checks.
- The park brake automatically applies when neutral is selected and it is not possible to engage neutral at speed. Torque dependent park brake release (hill assist) ensures no roll back on slopes.
- All trucks can be set to automatically sound the horn when starting or switching between forward and reverse.

- Best-in-class retarder and engine braking automatically applies when the operator lifts his foot off the accelerator. Retarder aggressiveness can be simply adjusted on the sealed switch module for maximum descent control in all conditions.
- Multiple geofencing in challenging site conditions ensures safe machine operation, such as downhill speed control, geofence speed limits and bin restrictions.

Maximise your uptime

The Bell Timber Truck is loaded with features that make it as easy to maintain as it is to operate.

Easy-to-reach dipsticks, see-through reservoirs, sight gauges and grouped service points make quick work of the daily routine. Quick change filters and extended engine and hydraulic oil-service intervals lower daily operating costs and promote superior machine uptime.

An industry leading 10-inch colour monitor offers on-board machine diagnostics and automated daily service functionality. This, coupled with diagnostic test ports, help you troubleshoot and make informed maintenance decisions on site.



The diagnostic monitor provides service codes and supporting information to help diagnose any problems.



The cab can be tilted in minutes without special tools, for convenient service access to drivetrain components.



An in-cab load centre simplifies fuse replacement. Fewer relays, connectors and harnesses mean higher reliability.







See-through fluid reservoirs and sight gauges let you check fluid levels at a glance.



Easily accessible test ports allow technicians to troubleshoot problems more quickly.



The centralised lube bank places grease points within easy reach.

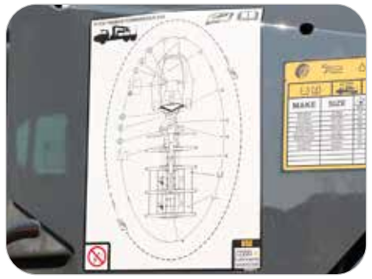

The convenient and easy to understand Recommended Service Guide (RSG) decal details daily checks and actions (e.g. greasing).

- Automated daily service checks can be done with ease and comfort from inside the operator station using the 10-inch colour LCD monitor and sealed display controller.

- Designed with simplicity and maintenance efficiency in mind, the load-sensing hydraulic system has fewer components for improved reliability and serviceability.

- Extended engine transmission and hydraulic oil change intervals support increased uptime and a lower operating cost.

- Available environmental drains allow quick, no-spill changes.

- Your Bell dealer has the parts and backup you need to stay productive and offers a wide variety of preventative maintenance and support programmes to help you control costs.

Building on pedigree

Bell Equipment's evolutionary approach to design delivers optimised power-to-weight ratio and legendary fuel efficiency.

Efficiency
With 8.5 m of reach, the Bell Timber Forwarder can reach cut-to-length timber in adjacent rows, minimising travel time up and down the compartment.

The addition of the crawl mode keeps the machine moving slowly forward while loading, increasing load times and machine efficiency.

Oscillation brake
An oscillation brake keeps the front and rear chassis rigid while loading to increase machine stability and improve safety.

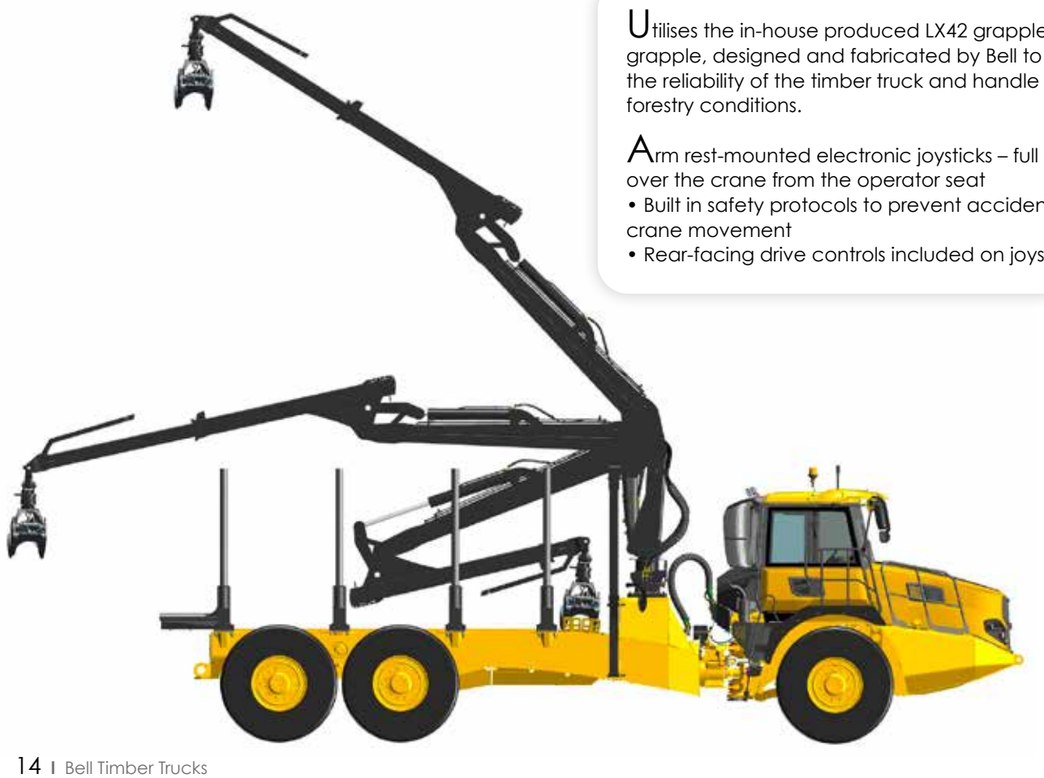

Utilises the in-house produced LX42 grapple - a grapple, designed and fabricated by Bell to match the reliability of the timber truck and handle tough forestry conditions.

Arm rest-mounted electronic joysticks – full control over the crane from the operator seat
- Built in safety protocols to prevent accidental crane movement
- Rear-facing drive controls included on joysticks

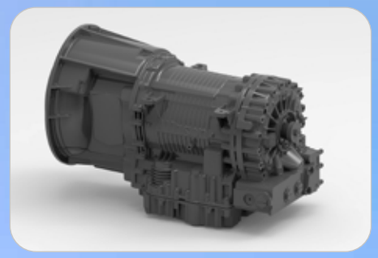

The planetary powershift transmission automatically optimises shift points to suit operating conditions and vehicle weight, while protecting the transmission against operator error and abuse. This industry-leading, fully automatic six-speed planetary transmission features torque converter lock-up to maximise fuel efficiency. Allison FuelSense® calibration further optimises productivity and fuel consumption.



The transfer case inter-axle differential delivers equal torque to each axle when traction is favourable. When conditions deteriorate, the diff lock automatically engages to deliver torque to the tyres with the best available traction.



High-strength steel and widely spaced taper roller bearings in the articulation area ensure long-term durability.

With a high oscillating frame joint, articulated steering, and high flotation tyres, these hard working haulers won't let wet weather or steep grades dampen your plans.



- Improved payloads, faster haul cycles and industry-leading fuel economy all help you move more material at a lower cost-per-tonne than your competitors.

- The short front end provides the best approach angle, allowing these trucks to attack steep terrain.

- The common rail electronic fuel injection system provides high injection pressures even at low engine speed for improved cold starting ability, low-speed response and reduced emissions.

- High-travel suspension keeps all tyres in constant contact with the ground for optimum traction.

- Class-leading payload-to-weight ratio means that more of your fuel cost is spent moving timber, providing maximum productivity and profitability.

Uncompromised durability

Built smarter to work harder. Bell Timber Trucks offer optimised machine design that can handle the toughest of forestry challenges.

Other uptime-boosting features include world-class on-board diagnostics with livestream functionality, solid-state sealed switches and a satellite fleet management system.

High-strength welded-alloy steel chassis and reinforced articulation joints offer superior strength and durability with optimised weight for class-leading power-to-weight ratios. Lower machine mass reduces powertrain and structural stress.

With decades of ADT experience, Bell Timber Trucks are designed and manufactured using purpose built, reliable Bell components best suited for the toughest of conditions. The central oscillation joint, high suspension travel on all axles, and balanced weight distribution provide the agility and ability to navigate hostile terrain.



The high-strength steel chassis delivers strength and rigidity without excess weight.

- Viscous, electronically controlled, direct-drive engine fans provide cooling for the best efficiency.
- Class-leading engine braking, combined with automated retardation, delivers superior braking power.



For comfortable productivity the A-frame suspension system coupled with hydropneumatic suspension struts reduce the lateral vibration often experienced with off-road conditions. A superior suspension seat provides additional isolation for the operator.



Rough terrain demands tough suspensions. Heavy-duty components absorb shocks and come back for more. You get best-in-class suspension travel and ground clearance, too.



Cutting edge technology, helping you run your fleet smarter. Providing accurate, up-to-date operational data, production data and diagnostic data.

The key to a productive and profitable fleet, lies in the ability to monitor and manage your machines and operators efficiently. Machine operational data is processed and compiled into useful production and performance statistics, accessible via the Bell Fleetm@tic® website. These reports are also automated and emailed directly to you. Two monitoring packages are available:

- **The Classic Package** supplies you with enough information for you to have a solid understanding of how your machine is operating for each shift that it runs. This package comes standard with the machine for two years.
- **The Premium Package** is focused on customers who need extremely detailed information about the machine's operation. For this package we offer similar information to that of the Classic Package but for each individual laden - unladen cycle. In addition, live tracking is available on the Fleetm@tic® website on a per minute basis.

Fleetm@tic®:

- Maximise productivity
- Generate machine utilisation reports
- Identify operator training requirements
- Pro-active maintenance planning
- Implement safety features
- Receive machine fault codes and suggested troubleshooting procedures
- Protect your investments
- Receive real time geospatial data

Timber Truck TF302E

ENGINE

Manufacturer
Mercedes Benz

Model
OM926LA

Configuration
Inline 6, turbocharged and intercooled

Power
205 kW (275 hp) @ 2 200 rpm

Gross torque
1 100 Nm (811 lbft) @ 1 200 -1 600 rpm

Displacement
6.37 litres (389 cu.in)

Auxiliary brake
Exhaust valve brake
Engine valve brake

Fuel tank capacity
379 litres (100 US gal)

Certification
OM926LA meets EU Stage II/EPA Tier 2 emissions regulations

TRANSMISSION

Manufacturer
Allison

Model
3500PR ORS

Configuration
Fully automatic planetary transmission with integral retarder

Layout
Engine mounted

Gear layout
Constant meshing planetary gears, clutch-operated

Gears
6 forward, 1 reverse

Clutch type
Hydraulically operated multi-disc

Control type
Electronic

Torque control
Hydrodynamic with lock-up in all gears

TRANSFER CASE

Manufacturer
Kessler

Series
W1400

Layout
Remote-mounted

Gear layout
Three in-line helical gears

Output differential
Inter-axle 33/67 proportional differential.
Automatic inter-axle differential lock

AXLES

Manufacturer
Bell

Model
15T

Differential
High-input limited-slip differential with spiral bevel gears

Final drive
Outboard heavy duty planetary on all axles

BRAKING SYSTEM

Service brake
Dual-circuit hydraulic actuation of wet-disc brakes on the front and middle axles. Wet brake oil is circulated through a filtration and cooling system

Maximum brake force:
184 kN (41 400 lbf)

Maximum brake force:
187 kN (42 000 lbf)

Park & emergency
Spring applied, air released driveline mounted disc

Maximum brake force:
195 kN (43 900 lbf)

Auxiliary brake
Automatic exhaust valve brake and engine valve brake.
Automatic, adjustable, integral, hydrodynamic transmission retarder. Output shaft speed dependant

Total retardation power
250 kW (335 hp) continuous
539 kW (723 hp) maximum

WHEELS

Type
Radial Earthmover

Tyre
23.5R25

FRONT SUSPENSION

Semi-independent, leading A-frame supported by hydropneumatic suspension struts

REAR SUSPENSION

Pivoting walking beams with laminated rubber suspension blocks

HYDRAULIC SYSTEM

Full load sensing system serving the prioritised steering, body tipping and brake functions. A ground-driven, load-sensing emergency steering pump is integrated into the main system

Pump type
Variable-displacement load-sensing piston

Flow
165 l/min (44 gal/min)

Pressure
28 Mpa (4 061 psi)

Filter
5 microns

STEERING SYSTEM

Double-acting cylinders, with ground-driven emergency steering pump

Lock to lock turns
4.1

Steering angle
45°

PNEUMATIC SYSTEM

Air drier with heater and integral unloader valve, serving park brake and auxiliary functions

System pressure
810 kPa (117 psi)

ELECTRICAL SYSTEM

Voltage
24 V

Battery type
Two AGM (absorption glass mat) type

Battery capacity
2 X 75 Ah

Alternator rating
28 V 80 A

VEHICLE SPEEDS

1st	7 km/h	4 mph
2nd	15 km/h	9 mph
3rd	23 km/h	14 mph
4th	35 km/h	22 mph
5th	47 km/h	29 mph
6th	50 km/h	31 mph
R	7 km/h	4 mph

CAB

ROPS/FOPS certified, 72 dBA internal sound level measured according to ISO 6396

LOAD CAPACITY

24 000 kg

Bunk area
35.2* m^3
**Calculated with the maximum rated log length*

OPERATING WEIGHTS

	Unladen	Laden
Front	11 500 kg	12 372 kg
Middle	4 634 kg	16 198 kg
Rear	4 694 kg	16 158 kg
Total (GVM)	20 828 kg	44 728 kg

Dimensions

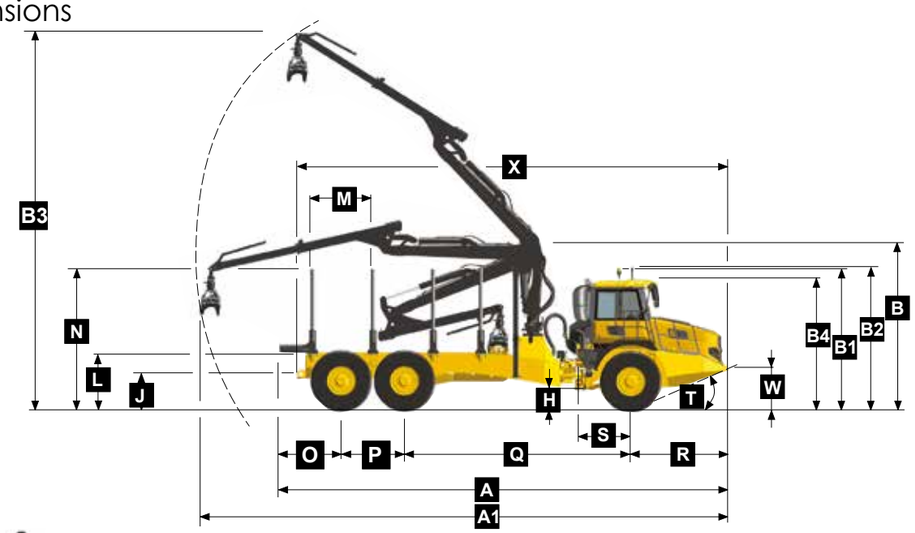

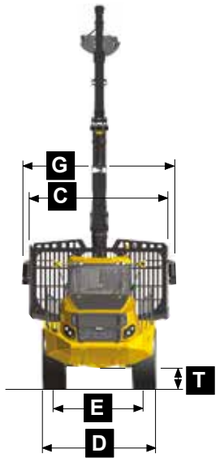

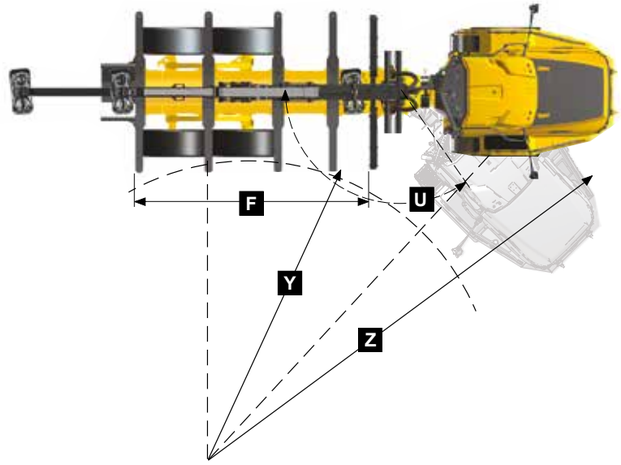

MACHINE DIMENSIONS		
A	Length - transport position	11 887 mm (38 ft 9 in)
A1	Length - crane fully extended	13 939 mm (34 ft 1 in)
B	Height - transport position	4 354 mm (14 ft 3 in)
B1	Height - rotating beacon	3 723 mm (12 ft 3 in)
B2	Height - load light	3 739 mm (12 ft 3 in)
B3	Crane height fully extended	9 929 mm (32 ft 6 in)
B4	Height - cab	3 426 mm (11 ft 3 in)
C	Bunk - width	3 608 mm (11 ft 9 in)
D	Width over tyres - 23.5 R25	2 940 mm (9 ft 7 in)
D1	Width over tyres - 750/65 R25	2 998 mm (9 ft 10 in)
E	Tyre track width - 23.5 R25	2 356 mm (7 ft 8 in)
E1	Tyre track width - 750/65 R25	2 260 mm (7 ft 4 in)
F	Width over bunk	3 686 mm (12 ft 2 in)
G	Width over mirrors - operating position	4 009 mm (13 ft 2 in)
H	Ground clearance - artic	537 mm (21.14 in)
I	Ground clearance - front axle	488 mm (19.21 in)
J	Ground to retrieval point	931 mm (3.2 in)

MACHINE DIMENSIONS		
L	Chassis lip w/o bunks	1 455 mm (4 ft 8 in)
M	Bunk spacing	1 591 mm (5 ft 3 in)
N	Load over height	3 700 mm (12 ft 2 in)
O	Rear axle centre to chassis rear	1 500 mm (4 ft 10 in)
P	Mid axle centre to rear axle centre	1 670 mm (5 ft 5 in)
Q	Mid axle centre to front axle centre	5 978 mm (19 ft 7 in)
R	Front axle centre to machine front	2 602 mm (8 ft 6 in)
S	Front axle centre to artic centre	1 362 mm (4 ft 5 in)
T	Approach angle	25°
U	Maximum crane angle	150°
V	Maximum articulation angle	45°
W	Front tie down height	1 075 mm (3 ft 6 in)
X	Machine tie down centres	11 248 mm (36 ft 10 in)
Y	Inner turning circle radius - 23.5 R25	4 110 mm (13 ft 5 in)
Y	Inner turning circle radius - 750/65 R25	4 081 mm (13 ft 4 in)
Z	Outer turning circle radius - 23.5 R25	8 000 mm (26 ft 2 in)
Z	Outer turning circle radius - 750/65 R25	8 029 mm (26 ft 4 in)

Timber Truck TF403E

ENGINE

Manufacturer
Mercedes Benz

Model
OM926LA

Configuration
Inline 6, turbocharged and intercooled

Power
240 kW (322 hp) @ 2 200 rpm

Gross torque
1 300 Nm (959 lbft) @ 1 200 -1 600 rpm

Displacement
7.2 litres (439 cu.in)

Auxiliary brake
Exhaust valve brake
Engine valve brake

Fuel tank capacity
TH403E & TH302E HP
379 litres (100 US gal)

TF403E
302 litres (80 US gal)

Certification
OM926LA meets EU Stage II/EPA Tier 2 emissions regulations

TRANSMISSION

Manufacturer
Allison

Model
3400P ORS

Configuration
Fully automatic planetary transmission

Layout
Engine mounted

Gear layout
Constant meshing planetary gears, clutch-operated

Gears
6 forward, 1 reverse

Clutch type
Hydraulically operated multi-disc

Control type
Electronic

Torque control
Hydrodynamic with lock-up in all gears

TRANSFER CASE

Manufacturer
Kessler

Series
W1400

Layout
Remote-mounted

Gear layout
Three in-line helical gears

Output differential
Inter-axle 33/67 proportional differential. Automatic inter-axle differential lock

AXLES

Manufacturer
Bell

Model
18T

Differential
High-input limited-slip differential with spiral bevel gears

Final drive
Outboard heavy-duty planetary on all axles

BRAKING SYSTEM

Service brake
Dual-circuit hydraulic actuation of wet-disc brakes on the front and middle axles

Maximum brake force:
187 kN (42 000 lbf)

Park & emergency
Spring applied, air released driveline mounted disc

Maximum brake force:
251 kN (56 400 lbf)

Auxiliary brake
Automatic engine valve brake. Automatic retardation through electronic activation of wet brake system

Total retardation power
265 kW (355 hp) continuous
494 kW (662 hp) maximum

WHEELS

Type
Radial Earthmover

Tyre
23.5 R 25

FRONT SUSPENSION

Semi-independent, leading A-frame supported by hydropneumatic suspension struts

REAR SUSPENSION

Pivoting walking beams with laminated rubber suspension blocks

HYDRAULIC SYSTEM

Full load sensing system serving the prioritised steering, body tipping and brake functions. A ground-driven, load-sensing emergency steering pump is integrated into the main system

Pump type
Variable-displacement load-sensing piston

Flow
165 l/min (44 gal/min)

Pressure
28 Mpa (4 061 psi)

Filter
5 microns

STEERING SYSTEM

Double-acting cylinders, with ground-driven emergency steering pump

Lock to lock turns
4.1

Steering angle
45°

PNEUMATIC SYSTEM

Air drier with heater and integral unloader valve, serving park brake and auxiliary functions

System pressure
810 kPa (117 psi)

ELECTRICAL SYSTEM

Voltage
24 V

Battery type
Two AGM (absorption glass mat) type

Battery capacity
2 X 75 Ah

Alternator rating
28 V 80 A

VEHICLE SPEEDS

1st	8 km/h	5 mph
2nd	14 km/h	9 mph
3rd	20 km/h	12 mph
4th	29 km/h	18 mph
5th	43 km/h	26 mph
6th	50 km/h	31 mph
R	8 km/h	5 mph

CAB

ROPS/FOPS certified, 72 dBA internal sound level measured according to ISO 6396

LOAD CAPACITY

24 888 kg

Bunk area
44.75* m^3
**Calculated with the maximum rated log length*

OPERATING WEIGHTS

	Unladen	Laden
Front	13 016 kg	15 702 kg
Middle	6 600 kg	17 701 kg
Rear	6 513 kg	17 614 kg
Total (GVM)	26 129 kg	51 017 kg

Dimensions

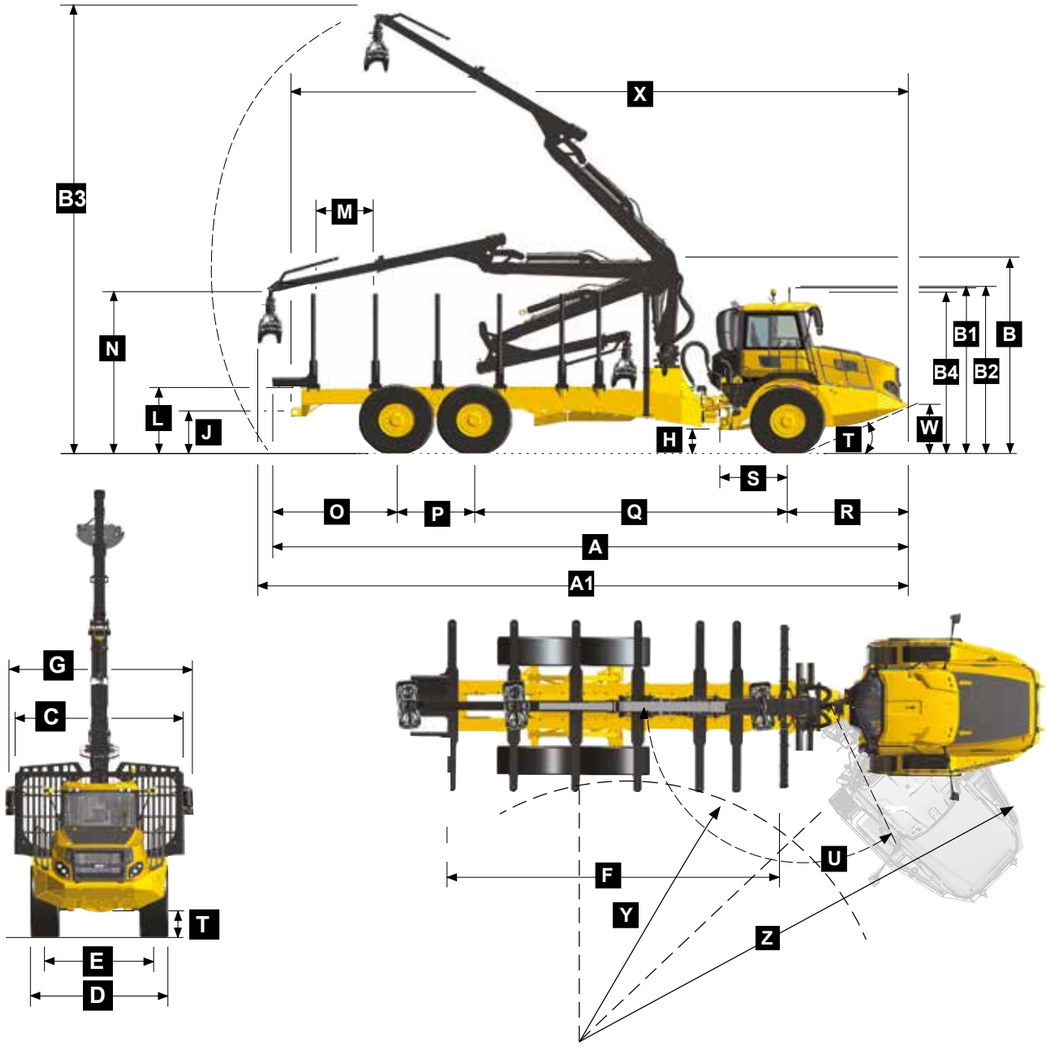

MACHINE DIMENSIONS			
A	Length - transport position	13 655 mm	(44 ft 10 in)
A1	Length - crane fully extended	13 939 mm	(45 ft 9 in)
B	Height - transport position	4 355 mm	(14 ft 4 in)
B1	Height - rotating beacon	3 723 mm	(12 ft 3 in)
B2	Height - load light	3 748 mm	(12 ft 3 in)
B3	Crane height fully extended	9 936 mm	(32 ft 8 in)
B4	Height - cab	3 420 mm	(11 ft 3 in)
C	Bunk width	3 608 mm	(11 ft 11 in)
D	Width over tyres 23.5R25	2 940 mm	(9 ft 7 in)
D1	Width over tyres 750/65R25	2 998 mm	(9 ft 10 in)
E	Tyre track width - 23.5R25	2 356 mm	(7 ft 9 in)
E1	Tyre track width - 750/65R25	2 260 mm	(7 ft 5 in)
F	Width over bunk	7 157 mm	(23 ft 6 in)
G	Width over mirrors - operating	4 026 mm	(13 ft 3 in)
H	Ground clearance - artic	540 mm	(1 ft 10 in)
I	Ground clearance - front axle	488 mm	(1 ft 7 in)
J	Ground to retrieval point	931 mm	(3 ft 1 in)

MACHINE DIMENSIONS			
L	Chassis lip w/o bunks	1 455 mm	(4 ft 9 in)
M	Bunk spacing	1 333 mm	(4 ft 4 in)
N	Load over height	3 606 mm	(11 ft 10 in)
O	Rear axle centre to chassis rear	2 669 mm	(8 ft 9 in)
P	Mid axle centre to rear axle centre	1 670 mm	(5 ft 11 in)
Q	Mid axle centre to front axle centre	6 717 mm	(22 ft 1 in)
R	Front axle centre to machine front	2 602 mm	(8 ft 6 in)
S	Front axle centre to artic centre	1 362 mm	(4 ft 5 in)
T	Approach angle		25°
U	Maximum crane angle		150°
V	Maximum articulation angle		45
W	Front tie down height	1 075 mm	(3 ft 6 in)
X	Machine tie down centres	13 094 mm	(42 ft 12 in)
Y	Inner turning circle radius - 23.5R25	4 110 mm	(13 ft 6 in)
Y1	Inner turning circle radius - 750/65 R25	4 081 mm	(13 ft 5 in)
Z	Outer turning circle radius - 23.5R25	8 000 mm	(26 ft 2 in)

Timber Truck TH302E

ENGINE

Manufacturer
Mercedes Benz

Model
OM926LA

Configuration
Inline 6, turbocharged and intercooled

Power
205 kW (275 hp) @ 2 200 rpm

Gross Torque
1 100 Nm (811 lbft) @ 1 200 -1 600 rpm

Displacement
6.37 litres (389 cu.in)

Auxiliary brake
Exhaust valve brake
Engine valve brake

Fuel tank capacity
379 litres (100 US gal)

Certification
OM926LA meets EU Stage II/EPA Tier 2 emissions regulations

TRANSMISSION

Manufacturer
Allison

Model
3500PR ORS

Configuration
Fully automatic planetary transmission with integral retarder

Layout
Engine-mounted

Gear layout
Constant meshing planetary gears, clutch-operated

Gears
6 forward, 1 reverse

Clutch type
Hydraulically operated multi-disc

Control type
Electronic

Torque control
Hydrodynamic with lock-up in all gears

TRANSFER CASE

Manufacturer
Kessler

Series
W1400

Layout
Remote-mounted

Gear layout
Three in-line helical gears

Output differential
Inter-axle 33/67 proportional differential. Automatic inter-axle differential lock

AXLES

Manufacturer
Bell

Model
15T

Differential
High-input limited-slip differential with spiral bevel gears

Final drive
Outboard heavy-duty planetary on all axles

BRAKING SYSTEM

Service brake
Dual-circuit hydraulic actuation of wet-disc brakes on the front and middle axles. Wet brake oil is circulated through a filtration and cooling system

Maximum brake force:
184 kN (41 400 lbf)

Maximum brake force:
187 kN (42 000 lbf)

Park & emergency
Spring-applied, air-released driveline mounted disc

Maximum brake force:
195 kN (43 900 lbf)

Auxiliary brake
Automatic exhaust valve brake and engine valve brake. Automatic, adjustable, integral, hydrodynamic transmission retarder. Output shaft speed dependant

Total retardation power
250 kW (335 hp) continuous
539 kW (723 hp) maximum

WHEELS

Type
Radial Earthmover

Tyre
23.5R25

FRONT SUSPENSION

Semi-independent, leading A-frame supported by hydropneumatic suspension struts

REAR SUSPENSION

Pivoting walking beams with laminated rubber suspension blocks

HYDRAULIC SYSTEM

Full load sensing system serving the prioritised steering, body tipping and brake functions. A ground-driven, load-sensing emergency steering pump is integrated into the main system

Pump type
Variable displacement load sensing piston

Flow
165 l/min (44 gal/min)

Pressure
28 Mpa (4 061 psi)

Filter
5 microns

STEERING SYSTEM

Double-acting cylinders, with ground-driven emergency steering pump

Lock to lock turns
4.1

Steering angle
45°

PNEUMATIC SYSTEM

Air drier with heater and integral unloader valve, serving park brake and auxiliary functions

System pressure
810 kPa (117 psi)

ELECTRICAL SYSTEM

Voltage
24 V

Battery type
Two AGM (absorption glass mat) type

Battery capacity
2 X 75 Ah

Alternator rating
28 V 80 A

VEHICLE SPEEDS

1st	7 km/h	4 mph
2nd	15 km/h	9 mph
3rd	23 km/h	14 mph
4th	35 km/h	22 mph
5th	47 km/h	29 mph
6th	50 km/h	31 mph
R	7 km/h	4 mph

CAB

ROPS/FOPS certified, 72 dBA internal sound level measured according to ISO 6396

LOAD CAPACITY

24 000 kg

Bunk area
35.2* m^3
**Calculated with the maximum rated log length*

OPERATING WEIGHTS

	Unladen	Laden
Front	8 804 kg	9 676 kg
Middle	1 693 kg	13 257 kg
Rear	2 206 kg	13 670 kg
Total (GVM)	12 703 kg	36 603 kg

Dimensions

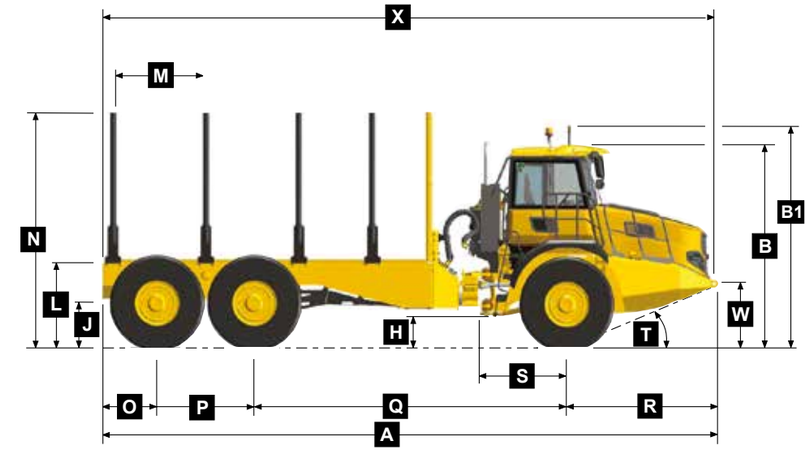

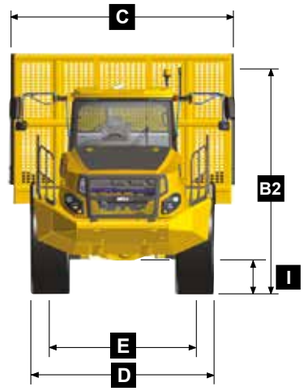

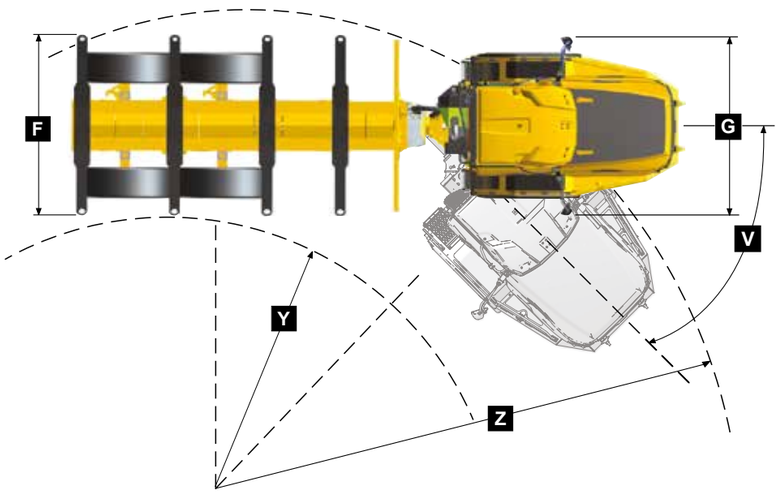

MACHINE DIMENSIONS			
A	Length - transport position	10 558 mm	(34 ft 6 in)
B	Height - transport position S5	3 403 mm	(11 ft 16 in)
B1	Height - rotating beacon	3 723 mm	(12 ft 3 in)
B2	Height - load light	3 963 mm	(13 ft 1 in)
C	Bunk - width	3 599 mm	(11 ft 8 in)
D	Width over tyres - 23.5 R25	2 963 mm	(9 ft 72 in)
D1	Width over tyres - 750/65 R25	2 998 mm	(9 ft 10 in)
E	Tyre track width - 23.5 R25	2 356 mm	(7 ft 8 in)
E1	Tyre track width - 750/65 R25	2 260 mm	(7 ft 4 in)
F	Width over bunk	3 691 mm	(12 ft 1 in)
G	Width over mirrors - operating position	3 652 mm	(11 ft 98 in)
H	Ground clearance - artic	537 mm	(21.14 in)
I	Ground clearance - front axle	488 mm	(19.21 in)
J	Ground to retrieval point	802 mm	(2 ft 6 in)
L	Chassis lip w/o bunks	1 418 mm	(4 ft 86 in)
M	Bunk spacing	1 591 mm	(5 ft 3 in)

MACHINE DIMENSIONS			
N	Bunk pole height from ground	3 952 mm	(12 ft 9 in)
O	Rear axle centre to chassis rear	934 mm	(3 ft 06 in)
P	Mid axle centre to rear axle centre	1 670 mm	(5 ft 5 in)
Q	Mid axle centre to front axle centre	5 357 mm	(17 ft 58 in)
R	Front axle centre to machine front	2 602 mm	(8 ft 6 in)
S	Front axle centre to artic centre	1 362 mm	(4 ft 5 in)
T	Approach angle		25°
V	Maximum articulation angle		45°
W	Front tie down height	1 075 mm	(3 ft 6 in)
X	Machine tie down centres	11 248 mm	(36 ft 10 in)
Y	Inner turning circle radius - 23.5 R25	4 110 mm	(13 ft 5 in)
Y1	Inner turning circle radius - 750/65 R25	4 081 mm	(13 ft 4 in)
Z	Outer turning circle radius - 23.5 R25	8 000 mm	(26 ft 2 in)
Z1	Outer turning circle radius - 750/65 R25	8 029 mm	(26 ft 4 in)

Timber Truck TH302E HP

ENGINE

Manufacturer
Mercedes Benz

Model
OM926LA

Configuration
Inline 6, turbocharged and intercooled

Power
240 kW (322 hp) @ 2 200 rpm

Gross torque
1 300 Nm (959 lbft) @ 1 200 -1 600 rpm

Displacement
7.2 litres (439 cu.in)

Auxiliary brake
Exhaust valve brake
Engine valve brake

Fuel tank capacity
379 litres (100 US gal)

Certification
OM926LA meets EU Stage II/EPA Tier 2 emissions regulations

TRANSMISSION

Manufacturer
Allison

Model
3400P ORS

Configuration
Fully automatic planetary transmission

Layout
Engine-mounted

Gear layout
Constant meshing planetary gears, clutch operated

Gears
6 forward, 1 reverse

Clutch Type
Hydraulically operated multi-disc

Control Type
Electronic

Torque Control
Hydrodynamic with lock-up in all gears

TRANSFER CASE

Manufacturer
Kessler

Series
W1400

Layout
Remote-mounted

Gear layout
Three in-line helical gears

Output differential
Inter-axle 33/67 proportional differential. Automatic inter-axle differential lock

AXLES

Manufacturer
Bell

Model
18T

Differential
High-input limited-slip differential with spiral bevel gears

Final drive
Outboard heavy-duty planetary on all axles

BRAKING SYSTEM

Service brake
Dual circuit, hydraulic actuation of wet-disc brakes on front and middle axles. Wet brake oil is circulated through a filtration and cooling system

Maximum brake force:
187 kN (42 000 lbf)

Park & emergency
Spring-applied, air-released driveline mounted disc

Maximum brake force:
251 kN (56 400 lbf)

Auxiliary brake
Automatic engine valve brake. Automatic retardation through electronic activation of wet brake system

Total retardation power
265 kW (355 hp) continuous
494 kW (662 hp) maximum

WHEELS

Type
Radial Earthmover

Tyre
23.5 R 25

FRONT SUSPENSION

Semi-independent, leading A-frame supported by hydropneumatic suspension struts

REAR SUSPENSION

Pivoting walking beams with laminated rubber suspension blocks

HYDRAULIC SYSTEM

Full load sensing system serving the prioritised steering, body tipping and brake functions. A ground-driven, load-sensing emergency steering pump is integrated into the main system

Pump type
Variable-displacement load-sensing piston

Flow
165 l/min (44 gal/min)

Pressure
28 Mpa (4 061 psi)

Filter
5 microns

STEERING SYSTEM

Double acting cylinders, with ground-driven emergency steering pump

Lock to lock turns
4.1

Steering angle
45°

PNEUMATIC SYSTEM

Air drier with heater and integral unloader valve, serving park brake and auxiliary functions

System pressure
810 kPa (117 psi)

ELECTRICAL SYSTEM

Voltage
24 V

Battery type
Two AGM (absorption glass mat) type

Battery capacity
2 X 75 Ah

Alternator rating
28 V 80 A

VEHICLE SPEEDS

1st	8 km/h	5 mph
2nd	14 km/h	9 mph
3rd	20 km/h	12 mph
4th	29 km/h	18 mph
5th	43 km/h	26 mph
6th	50 km/h	31 mph
R	8 km/h	5 mph

CAB

ROPS/FOPS certified, 72 dBA internal sound level measured according to ISO 6396

LOAD CAPACITY

24 000 kg

Bunk area
35.2* m^3
**Calculated with the maximum rated log length*

OPERATING WEIGHTS

	Unladen	Laden
Front	8 804 kg	9 676 kg
Middle	1 693 kg	13 257 kg
Rear	2 206 kg	13 670 kg
Total (GVM)	12 703 kg	36 603 kg

Dimensions

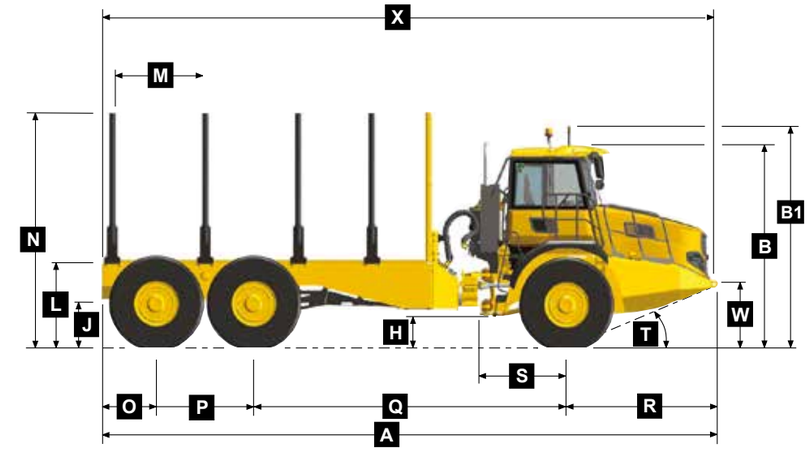

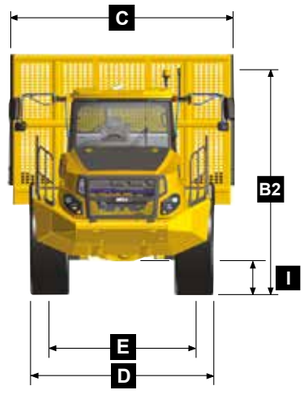

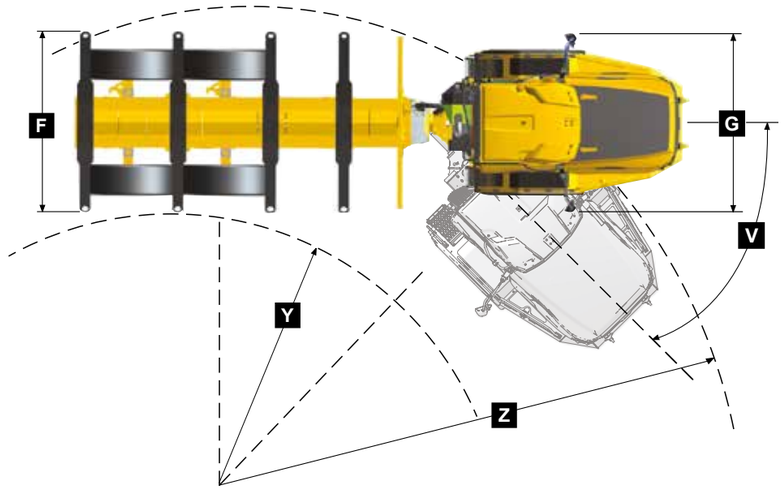

MACHINE DIMENSIONS			
A	Length - transport position	10 558 mm	(34 ft 6 in)
B	Height - transport position S5	3 403 mm	(11 ft 16 in)
B1	Height - rotating beacon	3 723 mm	(12 ft 3 in)
B2	Height - load light	3 963 mm	(13 ft 1 in)
C	Bunk - width	3 599 mm	(11 ft 8 in)
D	Width over tyres - 23.5 R25	2 963 mm	(9 ft 72 in)
D1	Width over tyres - 750/65 R25	2 998 mm	(9 ft 10 in)
E	Tyre track width - 23.5 R25	2 356 mm	(7 ft 8 in)
E1	Tyre track width - 750/65 R25	2 260 mm	(7 ft 4 in)
F	Width over bunk	3 691 mm	(12 ft 1 in)
G	Width over mirrors - operating position	3 652 mm	(11 ft 98 in)
H	Ground clearance - artic	537 mm	(21.14 in)
I	Ground clearance - front axle	488 mm	(19.21 in)
J	Ground to retrieval point	802 mm	(2 ft 6 in)
L	Chassis lip w/o bunks	1 418 mm	(4 ft 86 in)
M	Bunk spacing	1 591 mm	(5 ft 3 in)

MACHINE DIMENSIONS			
N	Bunk pole height from ground	3 952 mm	(12 ft 9 in)
O	Rear axle centre to chassis rear	934 mm	(3 ft 06 in)
P	Mid axle centre to rear axle centre	1 670 mm	(5 ft 5 in)
Q	Mid axle centre to front axle centre	5 357 mm	(17 ft 58 in)
R	Front axle centre to machine front	2 602 mm	(8 ft 6 in)
S	Front axle centre to artic centre	1 362 mm	(4 ft 5 in)
T	Approach angle		25°
V	Maximum articulation angle		45°
W	Front tie down height	1 075 mm	(3 ft 6 in)
X	Machine tie down centres	11 248 mm	(36 ft 10 in)
Y	Inner turning circle radius - 23.5 R25	4 110 mm	(13 ft 5 in)
Y1	Inner turning circle radius - 750/65 R25	4 081 mm	(13 ft 4 in)
Z	Outer turning circle radius - 23.5 R25	8 000 mm	(26 ft 2 in)
Z1	Outer turning circle radius - 750/65 R25	8 029 mm	(26 ft 4 in)

Timber Truck TH403E

ENGINE

Manufacturer
Mercedes Benz

Model
OM926LA

Configuration
Inline 6, turbocharged and intercooled

Power
240 kW (322 hp) @ 2 200 rpm

Gross torque
1 300 Nm (959 lbft) @ 1 200 -1 600 rpm

Displacement
7.2 litres (439 cu.in)

Auxiliary brake
Exhaust valve brake
Engine valve brake

Fuel tank capacity
379 litres (100 US gal)

Certification
OM926LA meets EU Stage II/EPA Tier 2 emissions regulations

TRANSMISSION

Manufacturer
Allison

Model
3400P ORS

Configuration
Fully automatic planetary transmission

Layout
Engine-mounted

Gear layout
Constant meshing planetary gears, clutch-operated

Gears
6 forward, 1 reverse

Clutch Type
Hydraulically operated multi-disc

Control Type
Electronic

Torque Control
Hydrodynamic with lock-up in all gears

TRANSFER CASE

Manufacturer
Kessler

Series
W1400

Layout
Remote mounted

Gear layout
Three in-line helical gears

Output differential
Inter-axle 33/67 proportional differential. Automatic inter-axle differential lock

AXLES

Manufacturer
Bell

Model
18T

Differential
High-input limited-slip differential with spiral bevel gears

Final drive
Outboard heavy-duty planetary on all axles

BRAKING SYSTEM

Service Brake
Dual circuit, hydraulic actuation of wet-disc brakes on front and middle axles. Wet brake oil is circulated through a filtration and cooling system

Maximum brake force:
187 kN (42 000 lbf)

Park & emergency
Spring-applied, air-released driveline mounted disc

Maximum brake force:
251 kN (56 400 lbf)

Auxiliary brake
Automatic engine valve brake. Automatic retardation through electronic activation of wet brake system

Total retardation power
265 kW (355 hp) continuous
494 kW (662 hp) maximum

WHEELS

Type
Radial Earthmover

Tyre
23.5 R 25

FRONT SUSPENSION

Semi-independent, leading A-frame supported by hydropneumatic suspension struts

REAR SUSPENSION

Pivoting walking beams with laminated rubber suspension blocks

HYDRAULIC SYSTEM

Full load sensing system serving the prioritised steering, body tipping and brake functions. A ground-driven, load-sensing emergency steering pump is integrated into the main system

Pump type
Variable-displacement load-sensing piston

Flow
165 l/min (44 gal/min)

Pressure
28 Mpa (4 061 psi)

Filter
5 microns

STEERING SYSTEM

Double-acting cylinders, with ground-driven emergency steering pump.

Lock to lock turns
4.1

Steering angle
45°

PNEUMATIC SYSTEM

Air drier with heater and integral unloader valve, serving park brake and auxiliary functions

System pressure
810 kPa (117 psi)

ELECTRICAL SYSTEM

Voltage
24 V

Battery type
Two AGM (absorption glass mat) type

Battery capacity
2 X 75 Ah

Alternator rating
28 V 80 A

VEHICLE SPEEDS

1st	8 km/h	5 mph
2nd	14 km/h	9 mph
3rd	20 km/h	12 mph
4th	29 km/h	18 mph
5th	43 km/h	26 mph
6th	50 km/h	31 mph
R	8 km/h	5 mph

CAB

ROPS/FOPS certified, 72 dBA internal sound level measured according to ISO 6396

LOAD CAPACITY

28 000 kg

Bunk area
44.75* m^3
**Calculated with the maximum rated log length*

OPERATING WEIGHTS

	Unladen	Laden
Front	10 320 kg	13 954 kg
Middle	3 659 kg	15 842 kg
Rear	4 025 kg	16 208 kg
Total (GVM)	18 004 kg	46 004 kg

Dimensions

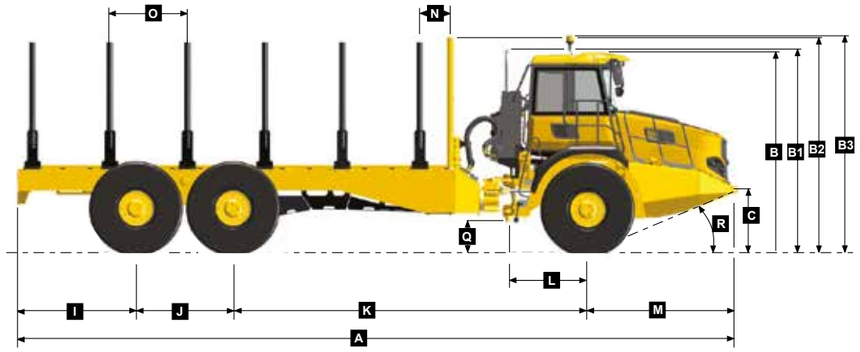



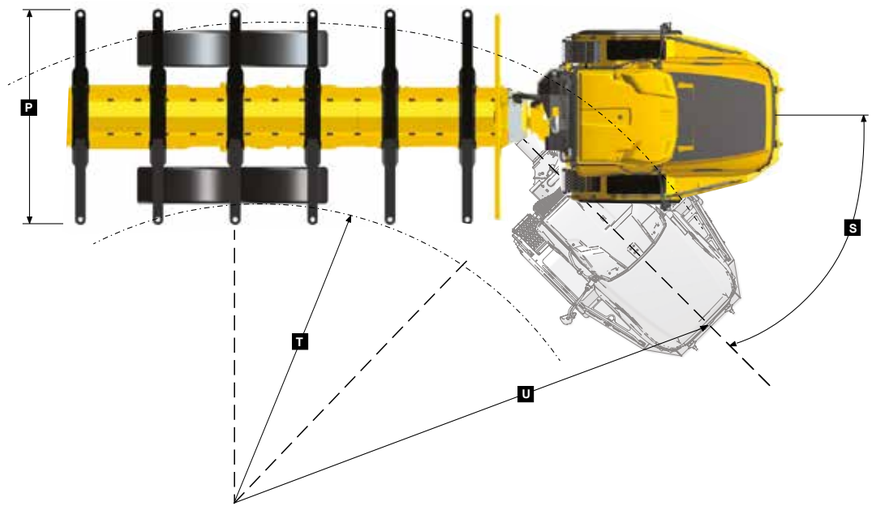

MACHINE DIMENSIONS		
A	Length - transport position	12 406 mm (40 ft 70 in)
B	Height - cab	3 492 mm (11 ft 45 in)
B1	Height - exhaust	3 567 mm (11 ft 70 in)
B2	Height - headboard	3 760 mm (12 ft 33 in)
B3	Height - rotating beacon	3 795 mm (12 ft 45 in)
C	Front tie down height	1 158 mm (3 ft 79 in)
D	Width over tyres	2 940 mm (9 ft 64 in)
E	Tyre track width	2 356 mm (7 ft 72 in)
F	Width over mirrors - operating position	3 258 mm (10 ft 68 in)
G	Width over headboard	3 512 mm (11 ft 52 in)
H	Width over bunk	3 692 mm (12 ft 11 in)
I	Rear axle centre to end of rear chassis	2 041 mm (6 ft 6 in)

MACHINE DIMENSIONS		
J	Mid axle centre to rear axle centre	1 670 mm (5 ft 47 in)
K	Mid axle centre to front axle centre	6 101 mm (20 ft 01 in)
L	Front axle centre to artic centre	1 368 mm (4 ft 48 in)
M	Front axle centre to machine front	2 595 mm (8 ft 51 in)
N	Headboard to first stay	473 mm (1 ft 55 in)
O	Distance between stays	1 333 mm (4 ft 37 in)
P	Width over stay	3 690 mm (12 ft 10 in)
Q	Ground clearance - artic	537 mm (4 ft 37 in)
R	Approach angle	25°
S	Maximum articulation angle	45°
T	Inner turning circle radius	6 021
U	Outer turning circle radius	10 723

Features and Options

● STANDARD ▲ OPTION

ENGINE
- ● Engine valve brake and exhaust brake
- ● Dual-element air cleaner with dust ejector valve
- ● Pre-cleaner
- ● Water separator
- ● Serpentine drive belt with automatic tensioner

COOLING
- ● Crankshaft-mounted viscous-drive fan
- ● Fan guard

PNEUMATIC SYSTEM
- ● Engine-mounted compressor
- ● Air drier with heater
- ● Integral unloader valve

ELECTRICAL SYSTEM
- ● Battery disconnect
- ● Drive lights
- ▲ Deluxe work lights
- ● Electric hooter
- ● Reverse alarm
- ● Rotating beacon
- ▲ Artic reverse light

STEERING SYSTEM
- ● Ground-driven secondary steering pump

CAB
- ● ROPS/FOPS certification
- ● Tilt cab
- ● Gas strut-supported door
- ● Air conditioner
- ● Heater
- ▲ AM/FM radio/CD player
- ● Rear window guard
- ● Wiper/washer with intermittent control
- ● Tilt and telescoping steering wheel
- ● Centre-mount air-suspension seat
- ▲ LED work lights
- ▲ Rotating beacon: seat belt installation
- ▲ Remote engine and machine isolation
- ▲ Remote battery jump start

CAB (continued)
- ● Retractable seat belt
- ● Foldaway trainer seat with retractable seat belt
- ▲ High visibility mirrors
- ● 12-volt power outlet
- ● Cup holder
- ● Cooled/heated lunch box
- ● Ashtray
- ▲ Electric adjustable and heated mirrors
- ● Deluxe 10-inch colour LCD: speedometer / fuel gauge / transmission oil temperature gauge / engine coolant temperature gauge / LED function/warning indicators and audible alarm / transmission gear selection / tachometer / battery voltage / hour meter / odometer / fuel consumption / trip timer / trip distance / metric/ English units / service codes/diagnostics
- ● Backlit sealed switch module functions with: wiper control / lights / heated mirrors / retarding aggressiveness / transfer case differential lock / transmission gear hold / airconditioner/ heater controls / preselected speed control

OTHER
- ● 23.5R25 tyres
- ▲ 620/75R26 tyres
- ▲ Dual 15x34 traction tyres
- ● Remote grease banks
- ▲ Automatic greasing
- ● Cab peak
- ▲ High pressure hydraulic filter
- ▲ Fuel heater
- ● Belly cover
- ▲ Handrails
- ▲ Remote transmission filter

ATTACHMENT OPTIONS
- ● Goose neck (125 mm)
- ▲ Pin + ballast
- ● Rear hydraulics bulkhead blanking
- ▲ Rear hydraulic bulkhead quick couplers

All dimensions are shown in millimetres, unless otherwise stated between brackets. Under our policy of continuous improvement, we reserve the right to change technical data and design without prior notice. Photographs featured in this brochure may include optional equipment. Blu@dvantage™ is a trademark of Bell Equipment Co. (PTY) Ltd AdBlue® is a registered trademark of VDA.

BELL HEAD OFFICE - RICHARDS BAY
Tel: +27 (0) 35-907 9297
E-mail: connect@bellequipment.com
www.bellequipment.com

Strong Reliable Machines
Strong Reliable Support

BELL

2636 - Timber Trucks (Broch0626) - English