Timber Truck TF302E

ENGINE

Manufacturer
Mercedes Benz

Model
OM926LA

Configuration
Inline 6, turbocharged and intercooled

Power
205 kW (275 hp) @ 2 200 rpm

Gross torque
1 100 Nm (811 lbft) @ 1 200 -1 600 rpm

Displacement
6.37 litres (389 cu.in)

Auxiliary brake
Exhaust valve brake
Engine valve brake

Fuel tank capacity
379 litres (100 US gal)

Certification
OM926LA meets EU Stage II/EPA Tier 2 emissions regulations

TRANSMISSION

Manufacturer
Allison

Model
3500PR ORS

Configuration
Fully automatic planetary transmission with integral retarder

Layout
Engine mounted

Gear layout
Constant meshing planetary gears, clutch-operated

Gears
6 forward, 1 reverse

Clutch type
Hydraulically operated multi-disc

Control type
Electronic

Torque control
Hydrodynamic with lock-up in all gears

TRANSFER CASE

Manufacturer
Kessler

Series
W1400

Layout
Remote-mounted

Gear layout
Three in-line helical gears

Output differential
Inter-axle 33/67 proportional differential. Automatic inter-axle differential lock

AXLES

Manufacturer
Bell

Model
15T

Differential
High-input limited-slip differential with spiral bevel gears

Final drive
Outboard heavy duty planetary on all axles

BRAKING SYSTEM

Service brake
Dual-circuit hydraulic actuation of wet-disc brakes on the front and middle axles. Wet brake oil is circulated through a filtration and cooling system

Maximum brake force:
184 kN (41 400 lbf)

Maximum brake force:
187 kN (42 000 lbf)

Park & emergency
Spring applied, air released driveline mounted disc

Maximum brake force:
195 kN (43 900 lbf)

Auxiliary brake
Automatic exhaust valve brake and engine valve brake.
Automatic, adjustable, integral, hydrodynamic transmission retarder. Output shaft speed dependant

Total retardation power
250 kW (335 hp) continuous
539 kW (723 hp) maximum

WHEELS

Type
Radial Earthmover

Tyre
23.5R25

FRONT SUSPENSION

Semi-independent, leading A-frame supported by hydropneumatic suspension struts

REAR SUSPENSION

Pivoting walking beams with laminated rubber suspension blocks

HYDRAULIC SYSTEM

Full load sensing system serving the prioritised steering, body tipping and brake functions. A ground-driven, load-sensing emergency steering pump is integrated into the main system

Pump type
Variable-displacement load-sensing piston

Flow
165 l/min (44 gal/min)

Pressure
28 Mpa (4 061 psi)

Filter
5 microns

STEERING SYSTEM

Double-acting cylinders, with ground-driven emergency steering pump

Lock to lock turns
4.1

Steering angle
45°

PNEUMATIC SYSTEM

Air drier with heater and integral unloader valve, serving park brake and auxiliary functions

System pressure
810 kPa (117 psi)

ELECTRICAL SYSTEM

Voltage
24 V

Battery type
Two AGM (absorption glass mat) type

Battery capacity
2 X 75 Ah

Alternator rating
28 V 80 A

VEHICLE SPEEDS

1st	7 km/h	4 mph
2nd	15 km/h	9 mph
3rd	23 km/h	14 mph
4th	35 km/h	22 mph
5th	47 km/h	29 mph
6th	50 km/h	31 mph
R	7 km/h	4 mph

CAB

ROPS/FOPS certified, 72 dBA internal sound level measured according to ISO 6396

LOAD CAPACITY

24 000 kg

Bunk area
35.2* m^3
**Calculated with the maximum rated log length*

OPERATING WEIGHTS

	Unladen	Laden
Front	11 500 kg	12 372 kg
Middle	4 634 kg	16 198 kg
Rear	4 694 kg	16 158 kg
Total (GVM)	20 828 kg	44 728 kg

Dimensions

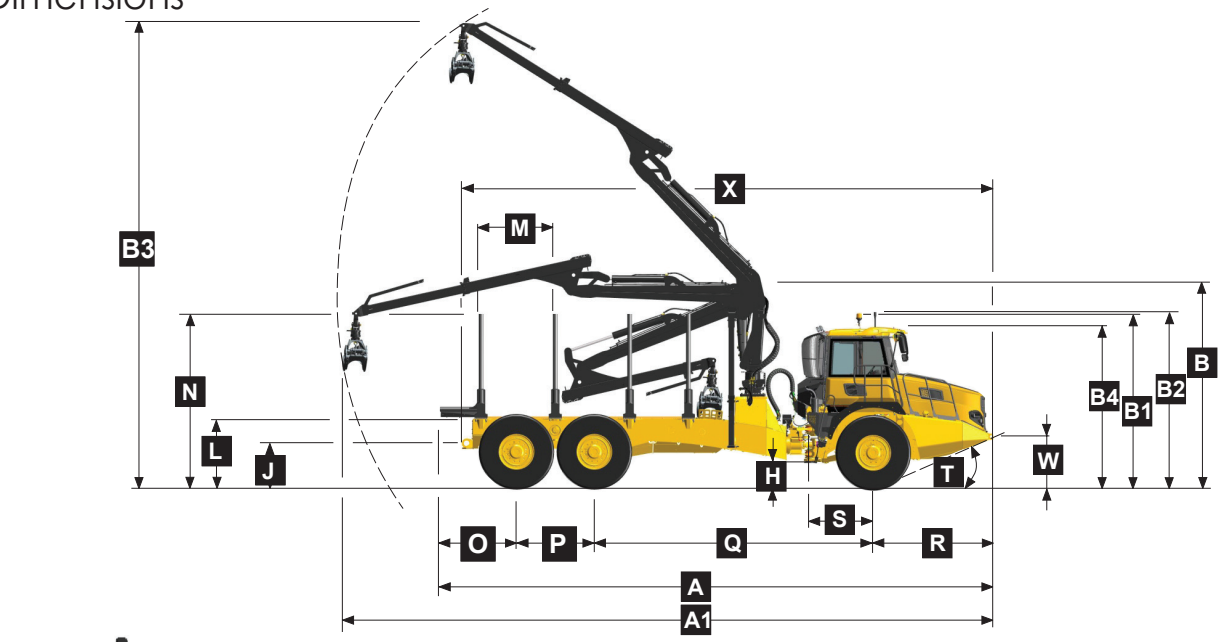

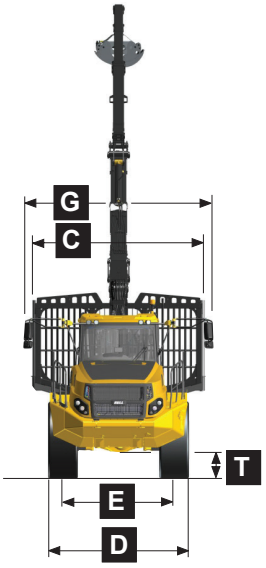

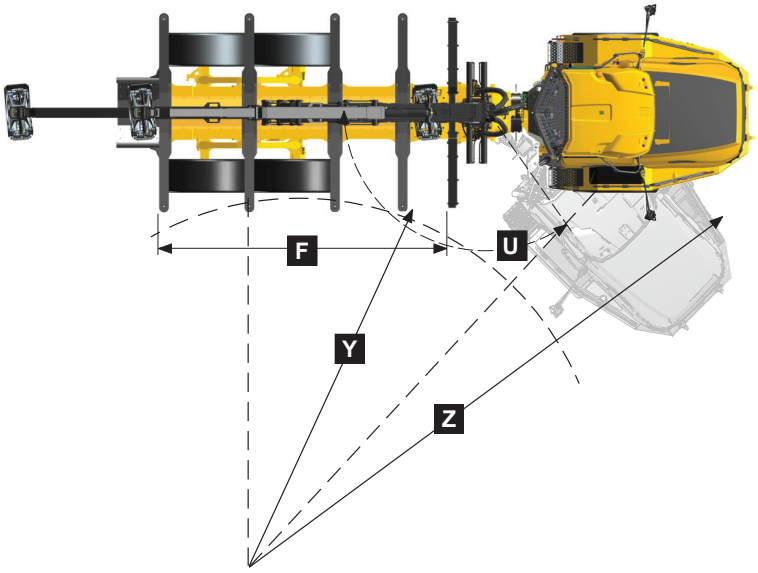

MACHINE DIMENSIONS		
A	Length - transport position	11 887 mm (38 ft 9 in)
A1	Length - crane fully extended	13 939 mm (34 ft 1 in)
B	Height - transport position	4 354 mm (14 ft 3 in)
B1	Height - rotating beacon	3 723 mm (12 ft 3 in)
B2	Height - load light	3 739 mm (12 ft 3 in)
B3	Crane height fully extended	9 929 mm (32 ft 6 in)
B4	Height - cab	3 426 mm (11 ft 3 in)
C	Bunk - width	3 608 mm (11 ft 9 in)
D	Width over tyres - 23.5 R25	2 940 mm (9 ft 7 in)
D1	Width over tyres - 750/65 R25	2 998 mm (9 ft 10 in)
E	Tyre track width - 23.5 R25	2 356 mm (7 ft 8 in)
E1	Tyre track width - 750/65 R25	2 260 mm (7 ft 4 in)
F	Width over bunk	3 686 mm (12 ft 2 in)
G	Width over mirrors - operating position	4 009 mm (13 ft 2 in)
H	Ground clearance - artic	537 mm (21.14 in)
I	Ground clearance - front axle	488 mm (19.21 in)
J	Ground to retrieval point	931 mm (3.2 in)

MACHINE DIMENSIONS		
L	Chassis lip w/o bunks	1 455 mm (4 ft 8 in)
M	Bunk spacing	1 591 mm (5 ft 3 in)
N	Load over height	3 700 mm (12 ft 2 in)
O	Rear axle centre to chassis rear	1 500 mm (4 ft 10 in)
P	Mid axle centre to rear axle centre	1 670 mm (5 ft 5 in)
Q	Mid axle centre to front axle centre	5 978 mm (19 ft 7 in)
R	Front axle centre to machine front	2 602 mm (8 ft 6 in)
S	Front axle centre to artic centre	1 362 mm (4 ft 5 in)
T	Approach angle	25°
U	Maximum crane angle	150°
V	Maximum articulation angle	45°
W	Front tie down height	1 075 mm (3 ft 6 in)
X	Machine tie down centres	11 248 mm (36 ft 10 in)
Y	Inner turning circle radius - 23.5 R25	4 110 mm (13 ft 5 in)
Y	Inner turning circle radius - 750/65 R25	4 081 mm (13 ft 4 in)
Z	Outer turning circle radius - 23.5 R25	8 000 mm (26 ft 2 in)
Z	Outer turning circle radius - 750/65 R25	8 029 mm (26 ft 4 in)

Features and Options

● STANDARD ▲ OPTION

ENGINE
- ● Engine valve brake and exhaust brake
- ● Dual-element air cleaner with dust ejector valve
- ● Pre-cleaner
- ● Water separator
- ● Serpentine drive belt with automatic tensioner

COOLING
- ● Crankshaft-mounted viscous-drive fan
- ● Fan guard

PNEUMATIC SYSTEM
- ● Engine-mounted compressor
- ● Air drier with heater
- ● Integral unloader valve

ELECTRICAL SYSTEM
- ● Battery disconnect
- ● Drive lights
- ▲ Deluxe work lights
- ● Electric hooter
- ● Reverse alarm
- ● Rotating beacon
- ▲ Artic reverse light

STEERING SYSTEM
- ● Ground-driven secondary steering pump

CAB
- ● ROPS/FOPS certification
- ● Tilt cab
- ● Gas strut-supported door
- ● Air conditioner
- ● Heater
- ▲ AM/FM radio/CD player
- ● Rear window guard
- ● Wiper/washer with intermittent control
- ● Tilt and telescoping steering wheel
- ● Centre-mount air-suspension seat
- ▲ LED work lights
- ▲ Rotating beacon: seat belt installation
- ▲ Remote engine and machine isolation
- ▲ Remote battery jump start

CAB (continued)
- ● Retractable seat belt
- ● Foldaway trainer seat with retractable seat belt
- ▲ High visibility mirrors
- ● 12-volt power outlet
- ● Cup holder
- ● Cooled/heated lunch box
- ● Ashtray
- ▲ Electric adjustable and heated mirrors
- ● Deluxe 10-inch colour LCD: speedometer / fuel gauge / transmission oil temperature gauge / engine coolant temperature gauge / LED function/warning indicators and audible alarm / transmission gear selection / tachometer / battery voltage / hour meter / odometer / fuel consumption / trip timer / trip distance / metric/ English units / service codes/diagnostics
- ● Backlit sealed switch module functions with: wiper control / lights / heated mirrors / retarding aggressiveness / transfer case differential lock / transmission gear hold / airconditioner/ heater controls / preselected speed control

OTHER
- ● 23.5R25 tyres
- ▲ 620/75R26 tyres
- ▲ Dual 15x34 traction tyres
- ● Remote grease banks
- ▲ Automatic greasing
- ● Cab peak
- ▲ High pressure hydraulic filter
- ▲ Fuel heater
- ● Belly cover
- ▲ Handrails
- ▲ Remote transmission filter

ATTACHMENT OPTIONS
- ● Goose neck (125 mm)
- ▲ Pin + ballast
- ● Rear hydraulics bulkhead blanking
- ▲ Rear hydraulic bulkhead quick couplers

All dimensions are shown in millimetres, unless otherwise stated between brackets. Under our policy of continuous improvement, we reserve the right to change technical data and design without prior notice. Photographs featured in this brochure may include optional equipment. Blu@dvantage™ is a trademark of Bell Equipment Co. (PTY) Ltd AdBlue® is a registered trademark of VDA.

BELL HEAD OFFICE - RICHARDS BAY
Tel: +27 (0) 35-907 9297
E-mail: connect@bellequipment.com
www.bellequipment.com

Strong Reliable Machines
Strong Reliable Support

2636 - Timber Trucks (Broch0626) - English