B30E Articulated Dump Truck

ENGINE
Manufacturer
Mercedes Benz

Model
OM936LA

Configuration
Inline 6, turbocharged and intercooled

Maximum Net Power
348 hp (260 kW) at 1,800 rpm in accordance with UN ECE R120

Gross Torque
1,069 lbft (1,450 Nm) @ 1,200 - 1,600 rpm

Displacement
469 cu.in (7.7 liters)

Auxiliary Brake
Jacobs Engine Brake®

Fuel Tank Capacity
79.78 US gal (302 liters)

AdBlue® Tank Capacity
8.2 US gal (31 L)

Certification
OM936LA meets EPA Tier 4 final/ Stage V emissions regulations

TRANSMISSION
Manufacturer
Allison

Model
3400 ORS

Configuration
Fully automatic planetary transmission with integral retarder

Layout
Engine mounted

Gear Layout
Constant meshing planetary gears, clutch operated

Gears
6 Forward, 1 Reverse

Clutch Type
Hydraulically operated multi-disc

Control Type
Electronic

Torque Control
Hydrodynamic with lock-up in all gears

TRANSFER CASE
Manufacturer
Kessler

Series
W1400

Layout
Remote mounted

Gear Layout
Three in-line helical gears

Output Differential
Interaxle 33/67 proportional differential. Automatic inter-axle differential lock.

AXLES
Manufacturer
Bell

Model
18T

Differential
High input limited slip differential with spiral bevel gears

Final Drive
Outboard heavy duty planetary on all axles

BRAKING SYSTEM
Service Brake
Dual circuit, full hydraulic actuation wet disc brakes on front and middle axles. Wet brake oil is circulated through a filtration and cooling system.

Maximum brake force:
40,000 lbf (178 kN)

Park & Emergency
Spring applied, air released driveline mounted disc

Maximum brake force:
48,200 lbf (214 kN)

Auxiliary Brake
Jacobs Engine Brake®.

Automatic retardation through electronic activation of wet brake system.

Total Retardation Power
Continuous: 449 hp (335 kW)
Maximum: 662 hp (494 kW)

WHEELS
Type
Radial Earthmover

Tire
23.5 R 25 (750/65 R 25 optional)

FRONT SUSPENSION
Semi-independent, leading A-frame supported by hydro-pneumatic suspension struts

REAR SUSPENSION
Pivoting walking beams with laminated rubber suspension blocks

HYDRAULIC SYSTEM
Full load sensing system serving the prioritized steering, body tipping and brake functions. A ground-driven, load sensing emergency steering pump is integrated into the main system.

Pump Type
Variable displacement load sensing piston

Flow
44 gal/min (165 L/min)

Pressure
310 Bar (4,500 psi)

Filter
5 microns

STEERING SYSTEM
Double acting cylinders, with ground-driven emergency steering pump

Lock to lock turns
4.1

Steering Angle
45º

DUMPING SYSTEM
Two double-acting, single stage, dump cylinders

Raise Time
14.5 s

Lowering Time
7.5 s

Tipping Angle
70º standard, or any lower angle programmable

PNEUMATIC SYSTEM
Air drier with heater and integral unloader valve, serving park brake and auxiliary functions

System Pressure
117 psi (810 kPa)

ELECTRICAL SYSTEM
Voltage
24 V

Battery Type
Two AGM (Absorption Glass Mat) type

Battery Capacity
2 X 75 Ah

Alternator Rating
28V 80A

VEHICLE SPEEDS

1st	4 mph	7 km/h
2nd	9 mph	15 km/h
3rd	14 mph	23 km/h
4th	22 mph	35 km/h
5th	29 mph	47 km/h
6th	31 mph	50 km/h
R	4 mph	7 km/h

CAB
ROPS/FOPS certified 74 dBA internal sound level measured according to ISO 6396

Load Capacity & Ground Pressure

OPERATING WEIGHTS		GROUND PRESSURE				LOAD CAPACITY		OPTION WEIGHTS	
UNLADEN	kg (lb)	LADEN-No sinkage		LADEN-15% sinkage		BODY	m³ (yd³)		kg (lb)
Front	10,953 (24,417)	23.5 R 25	kPa (Psi)	23.5 R 25	kPa (Psi)	Struck Capacity	13.5 (17.6)	Bin liner	1,182 (2,606)
Middle	6,194 (13,665)	Front	282 (41)	Front	246 (36)	SAE 2:1 Capacity	17 (22)	Tailgate	825 (1,818)
Rear	5,738 (12,650)	Middle	380 (55)	Middle	317 (46)	SAE 1:1 Capacity	21 (27.5)	Extra wheelset	
Total	22,885 (50,453)	Rear	380 (55)	Rear	317 (46)	SAE 2:1 Capacity		(23.5 R 25)	565 (1,246)
LADEN						with Tailgate	18 (23.5)	Extra wheelset	
Front	14,323 (31,577)	750/65 R 25	kPa (Psi)	750/65 R 25	kPa (Psi)			(750/65 R 25)	738 (1,627)
Middle	18,509 (40,805)	Front	235 (34)	Front	213 (31)	Rated Payload	28,000 kg		
Rear	18,053 (39,800)	Middle	310 (45)	Middle	274 (40)		(61,729 lbs)		
Total	50,885 (112,182)	Rear	310 (45)	Rear	274 (40)				

** including additional equipment (tailgate)*

Dimensions

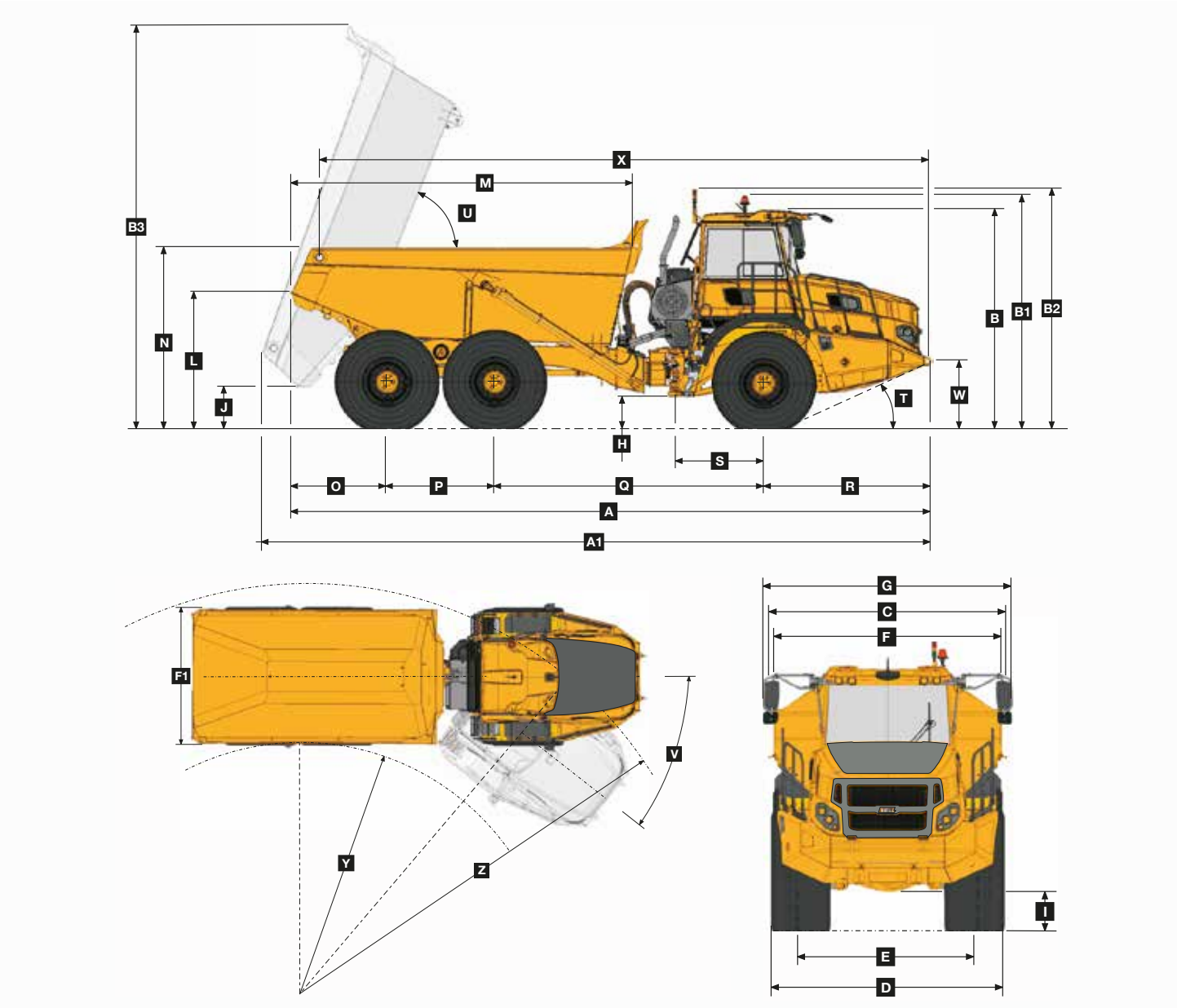

Machine Dimensions

A	Length - Transport Position	9,953 mm	(32 ft. 7 in.)
A1	Length - Bin Fully Tipped	10,395 mm	(34 ft. 1 in.)
B	Height - Transport Position	3,426 mm	(11 ft. 2 in.)
B1	Height - Rotating Beacon	3,661 mm	(12 ft.)
B2	Height - Load Light	3,747 mm	(12 ft. 3 in.)
B3	Bin Height - Fully Tipped	6,307 mm	(20 ft. 8 in.)
C	Width over Mudguards	2,985 mm	(9 ft. 9 in.)
D	Width over Tires - 23.5 R25	2,940 mm	(9 ft. 7 in.)
D1	Width over Tires - 750/65 R25	2,998 mm	(9 ft. 10 in.)
E	Tire Track Width - 23.5 R25	2,356 mm	(7 ft. 8 in.)
E1	Tire Track Width - 750/65 R25	2,260 mm	(7 ft. 4 in.)
F	Width over Bin	2,968 mm	(9 ft. 8 in.)
F1	Width over Tailgate	3,268 mm	(10 ft. 8 in.)
G	Width over Mirrors - Operating Position	3,260 mm	(10 ft. 8 in.)
H	Ground Clearance - Artic	537 mm	(21.14 in.)
I	Ground Clearance - Front Axle	488 mm	(19.21 in.)
J	Ground Clearance - Bin Fully Tipped	670 mm	(26.38 in.)
K	Ground Clearance - Under Run Bar	N/A	

L	Bin Lip Height - Transport Position	2,176 mm	(7 ft. 1 in.)
M	Bin Length	5,294 mm	(17 ft. 4 in.)
N	Load over Height	2,864 mm	(9 ft. 4 in.)
O	Rear Axle Center to Bin Rear	1,500 mm	(4 ft. 11 in.)
P	Mid Axle Center to Rear Axle Center	1,670 mm	(5 ft. 5 in.)
Q	Mid Axle Center to Front Axle Center	4,181 mm	(13 ft. 8 in.)
R	Front Axle Center to Machine Front	2,602 mm	(8 ft. 6 in.)
S	Front Axle Center to Artic Center	1,362 mm	(4 ft. 5 in.)
T	Approach Angle	25 °	
U	Maximum Bin Tip Angle	70 °	
V	Maximum Articulation Angle	45 °	
W	Front Tie Down Height	1,075 mm	(3 ft. 6 in.)
X	Machine Lifting Centers	9,443 mm	(30 ft. 11 in.)
Y	Inner Turning Circle Radius - 23.5 R25	4,110 mm	(13 ft. 5 in.)
Y1	Inner Turning Circle Radius - 750/65 R25	4,081 mm	(13 ft. 4 in.)
Z	Outer Turning Circle Radius - 23.5 R25	8,000 mm	(26 ft. 2 in.)
Z1	Outer Turning Circle Radius - 750/65 R25	8,029 mm	(26 ft. 4 in.)

Gradeability/Rimpull

1. Determine tractive resistance by finding intersection of vehicle mass line and grade line. NOTE: 2% typical rolling resistance is already assumed in chart and grade line.
2. From this intersection, move straight right across charts until line intersects rimpull curve.
3. Read down from this point to determine maximum speed attained at that tractive resistance.

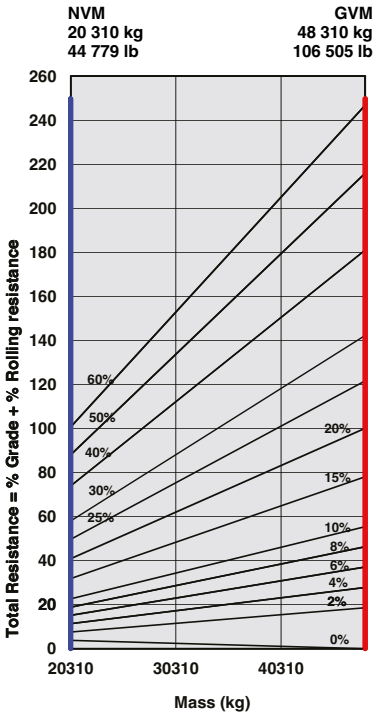

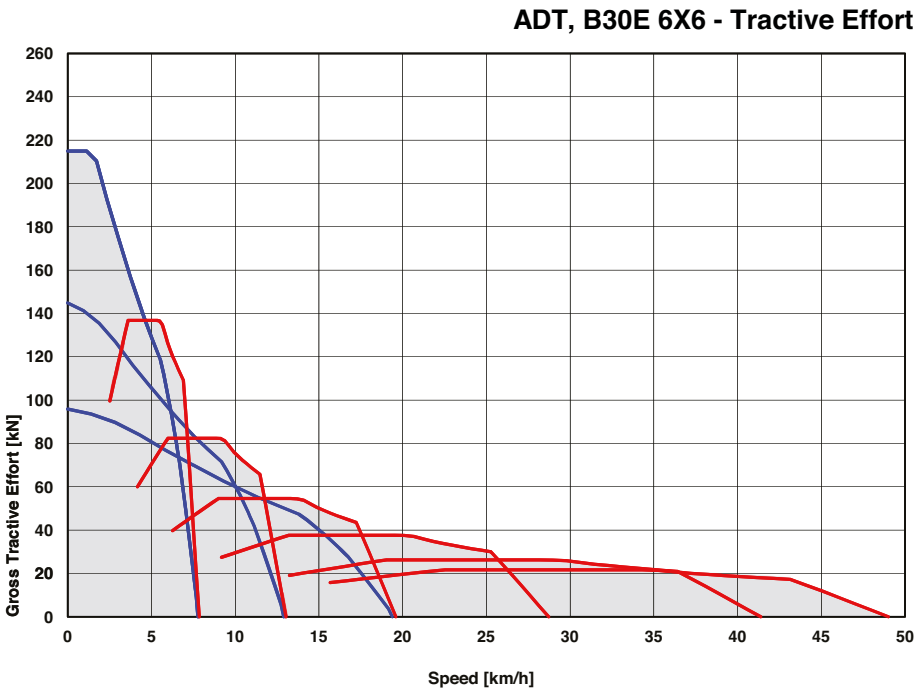

Retardation

1. Determine retardation force required by finding intersection of vehicle mass line.
2. From this intersection, move straight right across charts until line intersects the curve. NOTE: 2% typical rolling resistance is already assumed in chart.
3. Read down from this point to determine maximum speed.

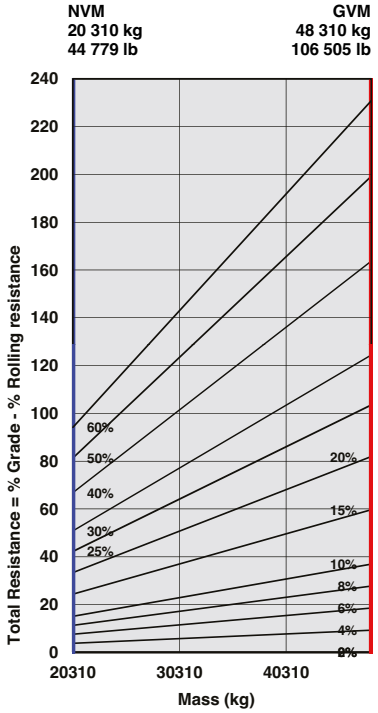

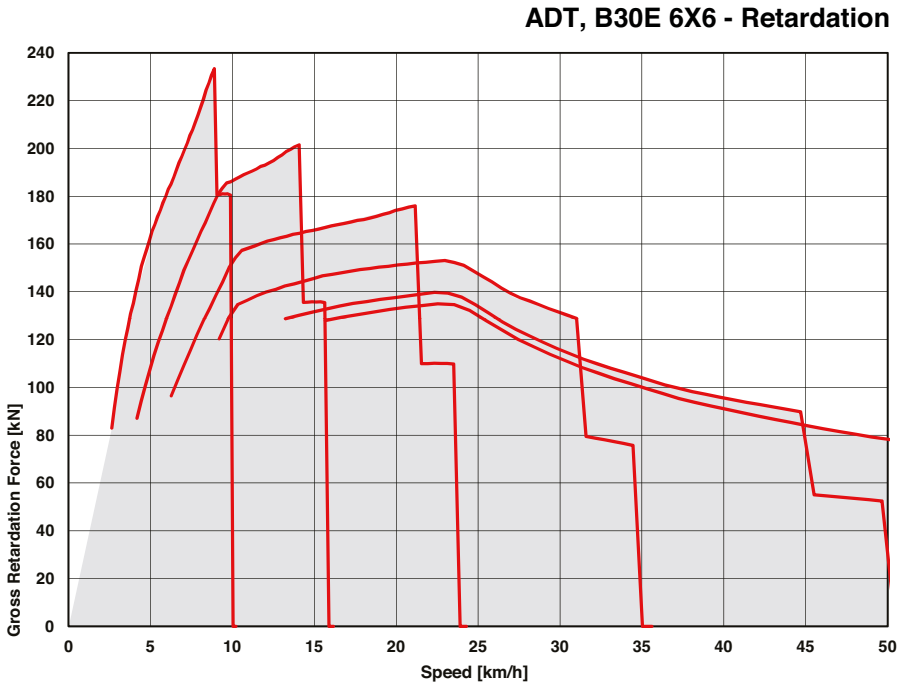

Features and Options

● STANDARD ▲ OPTION

B25E	B30E	
		ENGINE
●	●	Jacobs Engine Brake®
●	●	Dual element air cleaner with dust ejector valve
●	●	Precleaner with automatic dust scavenging
●	●	Water separator
●	●	Serpentine drive belt with automatic tensioner
●	●	Provision for fast fill
		COOLING
●	●	Crankshaft mounted electronically controlled viscous fan drive
●	●	Fan guard
		PNEUMATIC SYSTEM
●	●	Engine-mounted compressor
●	●	Air drier with heater
●	●	Integral unloader valve
		ELECTRICAL SYSTEM
●	●	Battery disconnect
●	●	Drive lights
●	●	Air horn
●	●	Reverse alarm
▲	▲	White noise reverse alarm
●	●	Rotating beacon
●	●	Pitch roll sensor
●	●	LED reverse lights
▲	▲	LED artic reverse light
▲	▲	Halogen artic reverse light
		STEERING SYSTEM
●	●	Bi-directional ground-driven secondary steering pump
		CAB
●	●	ROPS/FOPS certification
●	●	Tilt cab
●	●	Gas strut-supported door
●	●	I-Tip programmable dump-body tip settings
●	●	HVAC climate control system
●	●	AM/FM radio/CD player
●	●	Rear window guard
●	●	Wiper/washer with intermittent control
●	●	Tilt and telescoping steering wheel
●	●	Centre-mount air-suspension seat
▲	▲	LED work lights
●	●	Halogen work lights
▲	▲	Rotating beacon: seat belt installation
▲	▲	Remote engine and machine isolation
●	●	Remote battery jump start
●	●	Retractable 3 point seat belt
●	●	Heated seat
●	●	Foldaway trainer seat with retractable seat belt
●	●	12-volt power outlet

B25E	B30E	
		CAB (continued)
●	●	Cab utility bin (removable)
●	●	Cup holder
●	●	Cooled/heated lunch box
●	●	Electric adjustable and heated mirrors
●	●	Deluxe 10" color LCD: Speedometer / Fuel gauge / Transmission oil temperature gauge / Engine coolant temperature gauge / LED function/warning indicators and audible alarm / Transmission gear selection / Tachometer / Battery voltage / Hour meter / Odometer / Fuel consumption / Tip counter / Trip timer / Trip distance / Metric/English units / Service codes/diagnostics
●	●	Backlit sealed switch module functions with: Wiper control / Lights / Heated mirrors / Retarding aggressiveness / Transfer case differential lock / Transmission gear hold / Dump-body tip limit / Automatic dump-body tip settings / Airconditioner/Heater controls / Preselected Speed Control
		DUMP BODY
●	●	Dump body mechanical locks (x2). Partially up and fully up
▲	▲	Body liner
▲	▲	Tailgate
▲	▲	Body heater
▲	▲	Less dump body and cylinders
		OTHER
●	●	Automatic Traction Control (ATC)
	●	Wet disc brakes B30E
●		Dry disc brakes B25E
●	●	23.5R25 Radial Earthmover tires
	▲	750/65R25 Radial Earthmover tires
●	●	Remote grease banks
●	●	Automatic greasing
●	●	Onboard weighing
▲	▲	Load lights: stack
▲	▲	Comfort ride suspension (Front)
▲	▲	Comfort ride suspension (Rear)
●	●	Reverse camera
●	●	Hand rails
●	●	Cab peak
▲	▲	High pressure hydraulic filter
▲	▲	Fuel heater
●	●	Belly cover
●	●	Cross member cover
▲	▲	Remote transmission filters
●	●	Fleetm@tic® Classic Package for 5 years
●	●	Electronic hood opening

All dimensions are shown in millimeters, unless otherwise stated between brackets. Under our policy of continuous improvement, we reserve the right to change technical data and design without prior notice. Photographs featured in this brochure may include optional equipment. Blu@dvantage™ is a trademark of Bell Equipment Co. (PTY) Ltd AdBlue® is a registered trademark of VDA

BELL INTERNATIONAL: Tel: +27 (0)35-907 9431

E-mail: marketing@bellequipment.com **Web: www.bellequipment.com**

Tel: +61 (0)8-9355-2442
Tel: +27 (0)11-928-9700
Tel: +49 (0)6631 / 91-13-0
Tel: +44 (0)1283-712862
Tel: +33 (0)5-55-89-23-56
Tel: (704) 655-2802

Strong Reliable Machines
Strong Reliable Support

BELL

• A325E30 • A331E30

1767_B25E-B30E ADT_Pin3.4_StageV_Broch0123_US