STATIC DIMENSIONS – HT (HIGH-TORQUE)

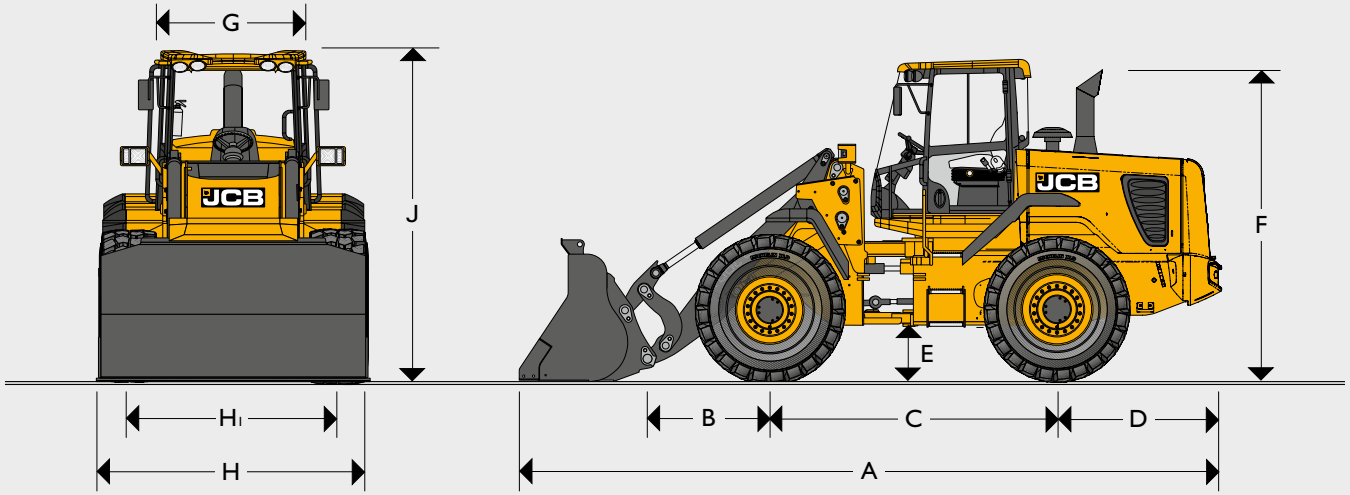

			426 HT	426 HT HL	426 ZX	436 HT	436 HT HL	436 HT SHL	436 ZX
A	Overall length	mm	6831	7244	6831	6926	7282	7726	7169
B	Axle to pivot pin	mm	1096	1509	1096	1143	1499	2366	1143
C	Wheel base	mm	3000	3000	3000	3000	3000	3000	3000
D	Axle to counterweight face	mm	1816	1816	1816	1816	1816	1816	1816
E	Minimum ground clearance	mm	442	442	442	459	459	459	459
F	Height over exhaust	mm	3236	3192	3192	3192	3192	3192	3192
G	Width over cab	mm	1400	1400	1400	1400	1400	1400	1400
H	Width over tyres	mm	2482	2482	2482	2597	2597	2597	2597
H1	Wheel track	mm	1955	2070	1955	2070	2070	2070	2070
J	Height over cab	mm	3335	3335	3335	3335	3335	3335	3335
	Pin height (maximum)	mm	3906	4336	3906	3996	4650	5213	3996
	Overall operating height	mm	5095	5525	5095	5305	5959	6522	5305
	Front axle weight	kg	5574	5869	5830	6013	7133	7968	6456
	Rear axle weight	kg	7126	7101	7020	8490	7860	7577	8466
	Total weight	kg	12700	12970	12850	14503	14993	15545	14922
	Inside radius	mm	2920	2825	2920	2825	2825	2825	2825
	Maximum radius over shovel	mm	5790	5985	5790	5860	6000	6196	5900
	Articulation angle	degrees	± 40°	± 40°	± 40°	± 40°	± 40°	± 40°	± 40°

426 data based on machine equipped with pin mounted 1.9m³ bucket with toe plates and Michelin 20.5 R25 XHA2 (L3) radial tyres.
436 data based on machine equipped with pin mounted 2.4m³ bucket with toe plates and Michelin 20.5 R25 XHA2 (L3) radial tyres.

CHANGES TO OPERATING PERFORMANCE AND DIMENSIONS

426 HT					Standard arms		HI LIFT arms		Dimensions	
Tyre size	Manufacturer	Type	Rating	Op weight kg	STL kg	FTTL kg	STL kg	FTTL kg	Vertical mm	Width mm
20.5 - 25 (crossply)	Firestone	SGG	L2	-348	-245	-215	-204	-179	-9	+5
20.5 - 25 (crossply)	Goodyear	SGL D/L	L2	-216	-152	-134	-126	-111	-9	+5
20.5 R 25 (radial)	Goodyear	RL - 2 +	L2	+76	+54	+47	+45	+39	-9	+5
20.5 R 25 (radial)	Bridgestone	VUT	L2	-160	-113	-99	-94	-82	0	0
20.5 R 25 (radial)	Michelin	XTLA	L2	-160	-113	-99	-94	-82	-9	+5
20.5 R 25 (radial)	Bridgestone	VMT	L3	0	0	0	0	0	0	0
550/65 R 25 (radial)	Michelin	XLD	L3	-120	-85	-75	-71	-62	0	0
20.5 R 25 (radial)	Michelin	XRD1A	L4	+332	+257	+206	+214	+171	+29	+8
20.5 R 25 (radial)	Michelin	XMINED2	L5	+680	+480	+421	+399	+350	+29	-3
20.5 R 25 (radial)	Goodyear	RL-5K	L5	+600	+423	+372	+352	+310	+29	-3
620/75 R25 (radial)	Michelin	MEGA XBIB		-107	-75	-67	-62	-56	+62	+258
20.5R25 (radial)	JCB	Earthmover	L3	128	90	78	77	47	41	12
20.5-25 (crossply)	JCB	Sitemaster	L3	100	70	61	60	37	21	-7
Optional additional bolt-on counterweight				+380	+707	+598	+604	+513	0	0

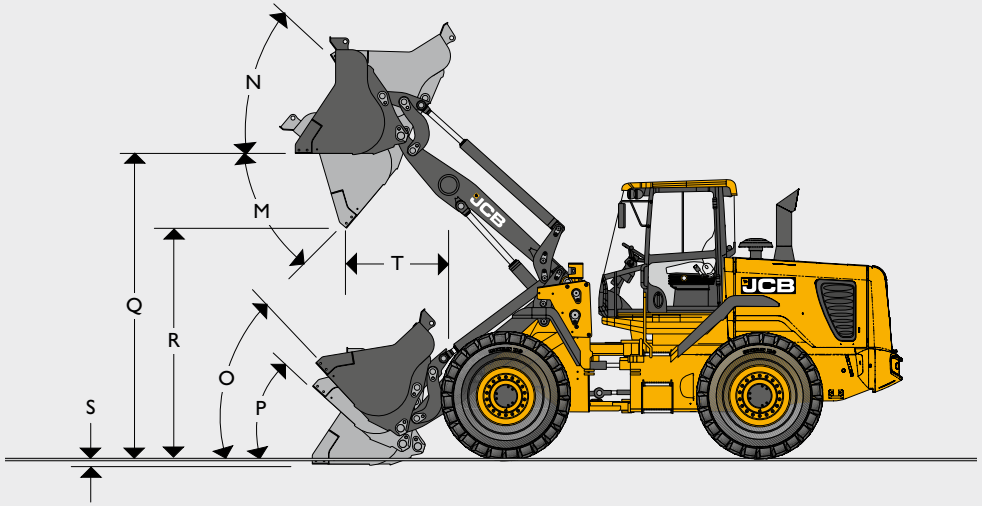

LOADER DIMENSIONS – 426 HT

Assumes the machine is fitted with 1.9m³ shovel with toeplates and Michelin 20.5R25 XHA (L3) tyres.

	Model		426 HT – STANDARD HEIGHT ARM												426 HT – HI LIFT ARM											
	Bucket mounting		Direct						Quickhitch						Direct						Quickhitch					
	Bucket type		General purpose												General purpose											
	Bucket equipment		Tipped teeth		Reversible toeplate				Tipped teeth		Reversible toeplate				Tipped teeth		Reversible toeplate				Tipped teeth		Reversible toeplate			
	Bucket capacity (SAE heaped)	m³	1.8	2.0	1.9	2.1	2.4	2.7	1.8	2.0	1.9	2.1	2.4	2.7	1.8	2.0	1.9	2.1	2.4	2.7	1.8	2.0	1.9	2.1	2.4	2.7
	Bucket capacity (struck)	m³	1.556	1.765	1.616	1.830	2.057	2.346	1.554	1.749	1.594	1.787	2.057	2.346	1.556	1.765	1.616	1.830	2.057	2.346	1.554	1.749	1.594	1.787	2.057	2.346
	Bucket width	mm	2550	2550	2550	2550	2700	2700	2550	2550	2550	2550	2700	2700	2550	2550	2550	2550	2700	2700	2550	2550	2550	2550	2700	2700
	Bucket weight	kg	810	850	810	850	1136	1211	800	850	800	850	1136	1211	810	850	810	850	1136	1211	800	850	800	850	1136	1211
	Maximum material density	kg/m³	2332	2068	2209	1969	1655	1439	2125	1884	2013	1794	1508	1311	1947	1726	1844	1644	1381	1201	1774	1573	1681	1498	1260	1095
	Tipping load straight	kg	9819	9797	9819	9797	9334	9147	8983	8859	8983	8859	8554	8384	8199	8180	8199	8180	7794	7638	7501	7397	7501	7397	7142	7000
	Tipping load full turn	kg	8396	8271	8396	8271	7944	7774	7650	7537	7650	7537	7243	7085	7010	6906	7010	6906	6633	6491	6388	6293	6388	6293	6048	5916
	Payload	kg	4198	4136	4198	4136	3972	3887	3825	3768	3825	3768	3621	3542	3505	3453	3505	3453	3316	3245	3194	3146	3194	3145	3024	2958
	Maximum break out force	kN	138	128	138)	128	123	115	121	113	121	113	106	99	138	128	138	128	123	115	121	113	121	113	106	99
M	Dump angle maximum	degrees	49°	49°	49°	49°	49°	49°	49°	49°	49°	49°	49°	49°	45°	45°	45°	45°	45°	45°	45°	45°	45°	45°	45°	45°
N	Roll back angle full height	degrees	58°	58°	58°	58°	58°	58°	58°	58°	58°	58°	58°	58°	58°	58°	58°	58°	58°	58°	58°	58°	58°	58°	58°	58°
O	Roll back at carry	degrees	48°	48°	48°	48°	48°	48°	48°	48°	48°	48°	48°	48°	50°	50°	50°	50°	50°	50°	50°	50°	50°	50°	50°	50°
P	Roll back at ground level	degrees	43°	43°	43°	43°	43°	43°	43°	43°	43°	43°	43°	43°	48°	48°	48°	48°	48°	48°	48°	48°	48°	48°	48°	48°
Q	Load over height	mm	3627	3627	3612	3612	3610	3610	3627	3627	3612	3612	3610	3610	4057	4057	4042	4042	4040	4040	4057	4057	4042	4042	4040	4040
R	Dump height (45° dump)	mm	2817	2767	2944	2896	2860	2796	2697	2647	2848	2775	2739	2676	3247	3197	3374	3326	3290	3226	3212	3127	3278	3205	3169	3106
S	Dig depth	mm	50	50	47	47	47	47	50	50	47	47	47	47	113	113	110	110	110	110	128	113	110	110	110	110
T	Reach at dump height	mm	1071	1121	946	99	1028	1092	1191	1240	1052	1118	1149	1213	1233	1983	1108	1158	1190	1254	1244	1253	1214	1280	1311	1375
	Pin height	mm	3876	3876	3876	3876	3876	3876	3876	3876	3876	3876	3876	3876	4306	4306	4306	4306	4306	4306	4306	4306	4306	4306	4306	4306
	Reach maximum (45° dump) – horizontal arm	mm	1818	1868	1693	1743	1775	1839	1938	1987	1800	1865	1896	1960	2166	2216	2041	2091	2123	2187	2177	2286	2148	2213	2244	2308
	Operating weight (includes 80kg operator and full fuel tank)	kg	12700	12740	12700	12740	13025	13100	12980	13030	12980	13030	13316	13390	12970	13010	12970	13010	13925	13370	13250	13300	13250	13300	13586	13660

CHANGES TO OPERATING PERFORMANCE AND DIMENSIONS

426 ZX					Standard arms		Dimensions	
Tyre size	Manufacturer	Type	Rating	Op weight kg	STL kg	FTTL kg	Vertical mm	Width mm
20.5 - 25 (crossply)	Firestone	SGG	L2	-348	-245	-215	-9	+5
20.5 - 25 (crossply)	Goodyear	SGL	L2	-54	-38	-33	-9	+5
20.5 R 25 (radial)	Goodyear	RL - 2+	L2	+76	+54	+47	-9	+5
20.5 R 25 (radial)	Bridgestone	VUT	L2	-160	-113	-99	0	0
20.5 R 25 (radial)	Michelin	XTLA	L2	-160	-113	-99	-9	+5
20.5 R 25 (radial)	Bridgestone	VMT	L3	0	0	0	0	0
550/65 R 25 (radial)	Michelin	XLD	L3	-120	-85	-74	0	0
20.5 R 25 (radial)	Michelin	XRD1A	L4	+456	+332	+282	+29	+8
20.5 R 25 (radial)	Michelin	XMINED2	L5	+680	+480	+421	+29	-3
20.5 R 25 (radial)	Goodyear	RL-5K	L5	+600	+423	+372	+29	-3
20.5R25 (radial)	JCB	Earthmover	L3	128	86	74	41	12
20.5-25 (crossply)	JCB	Sitemaster	L3	100	67	58	21	-7
Optional additional bolt-on counterweight				+380	+707	+598	0	0

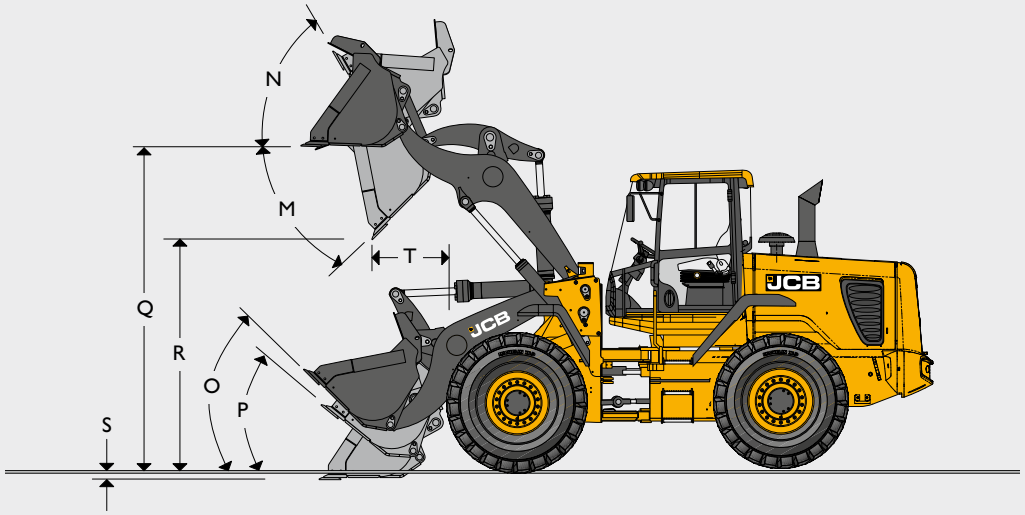

LOADER DIMENSIONS – 426 ZX

Assumes the machine is fitted with 1.9m³ shovel with toeplates and Michelin 20.5R25 XHA (L3) tyres.

	Model		426 ZX														
	Bucket mounting		Direct								Quickhitch						
	Bucket type		General purpose			Penetration	General purpose				General purpose						
	Bucket equipment		Tipped teeth				Reversible toeplate				Tipped teeth			Reversible toeplate			
	Bucket capacity (SAE heaped)	m³	1.8	2	2.3	2	1.9	2.1	2.4	2.7	1.8	2	2.3	1.9	2.1	2.4	2.7
	Bucket capacity (struck)	m³	1.55	1.72	1.984	1.72	1.61	1.79	2.06	2.35	1.55	1.75	1.98	1.59	1.79	2.06	2.35
	Bucket width	mm	2550	2550	2740	2550	2550	2550	2740	2740	2550	2550	2740	2550	2550	2740	2740
	Bucket weight	kg	925	1040	1250	1140	925	1040	1262	1329	800	850	1124	800	850	1136	1211
	Maximum material density	kg/m³	2298	2053	1761	2040	2203	1970	1677	1479	2152	1915	1559	2172	1943	1653	1447
	Tipping load straight	kg	9687	9627	9516	9574	9795	9687	9465	9398	9067	8969	8432	9067	8969	8747	8680
	Tipping load full turn	kg	8273	8212	8101	8159	8370	8273	8051	7984	7748	7659	7171	7748	7659	7437	7370
	Payload	kg	4137	4106	4051	4080	4185	4137	4026	3992	3874	3830	3586	3874	3830	3719	3685
	Maximum break out force	kN	145	135	129	135	145	135	129	120	126	118	113	126	118	113	106
M	Dump angle maximum	degrees	45	45	45	45	45	45	45	45	45	45	45	45	45	45	45
N	Roll back angle full height	degrees	52	52	52	52	52	52	52	52	52	52	52	52	52	52	52
O	Roll back at carry	degrees	44	44	44	44	44	44	44	44	44	44	44	44	44	44	44
P	Roll back at ground level	degrees	35	35	35	35	35	35	35	35	35	35	35	35	35	35	35
Q	Load over height	mm	3645	3645	3638	3640	3640	3640	3638	3638	3645	3645	3638	3640	3640	3638	3638
R	Dump height (45° dump)	mm	2850	2800	2889	2800	2973	2925	2889	2825	2726	2694	2768	2852	2804	2768	2704
S	Dig depth	mm	15	15	15	15	30	30	32	32	33	33	32	30	30	32	32
T	Reach at dump height	mm	1081	1131	1019	1131	936	986	1019	1083	1182	1232	1140	1057	1107	1140	1204
	Pin height	mm	3904	3904	3904	3904	3904	3904	3904	3904	3904	3904	3904	3904	3904	3904	3904
	Reach maximum (45° dump) – horizontal arm	mm	1828	1878	1776	1878	1683	1733	1766	1830	1929	1979	1907	1804	1854	1907	1951
	Operating weight (includes 80kg operator and full fuel tank)	kg	12890	13005	13215	13105	12850	12890	13112	13179	13005	10345	13319	13005	13045	13331	13406

CHANGES TO OPERATING PERFORMANCE AND DIMENSIONS

436 HT					Standard arms		HI LIFT Arms		SHL Arms		Dimensions	
Tyre size	Manufacturer	Type	Rating	Op weight kg	STL kg	FTTL kg	STL kg	FTTL kg	STL kg	FTTL kg	Vertical mm	Width mm
20.5 - 25 (crossply)	Firestone	–	L2	-348	-208	-201	-168	-164	-135	-130	-9	+5
20.5 - 25 (crossply)	Goodyear	SGL	L2	-54	-32	-31	-25	-24	-21	-20	-9	+5
20.5 R25 (radial)	Goodyear	RL - 2 +	L2	+76	+45	+44	+36	+35	-73	-64	-9	+5
20.5 R25 (radial)	Bridgestone	VUT	L2	-160	-96	-93	-78	-76	+29	+28	0	0
20.5 R25 (radial)	Michelin	XTLA	L2	-160	-96	-93	-78	-76	-73	-64	-9	+5
20.5 R25 (radial)	Bridgestone	VMT	L3	0	0	0	0	0	0	0	0	0
550/65 R25 (radial)	Michelin	XLD	L3	-120	-71	-69	-55	-55	-46	-45	0	0
20.5 R25 (radial)	Michelin	XRD1A	L4	+456	+272	+264	+219	+215	-177	-171	+29	+8
20.5 R25 (radial)	Michelin	XMINED2	L5	+680	+407	+393	+321	+321	+264	+255	+29	-3
20.5 R25 (radial)	Goodyear	RL-5K	L5	+600	+358	+347	+289	+283	+232	-225	+29	-3
20.5R25 (radial)	JCB	Earthmover	L3	128	86	74	70	41	40	28	41	12
20.5-25 (crossply)	JCB	Sitemaster	L3	100	67	58	55	32	31	22	21	-7
Optional heavy counterweight				+380	+683	+570	+550	+466	+421	+353	0	0

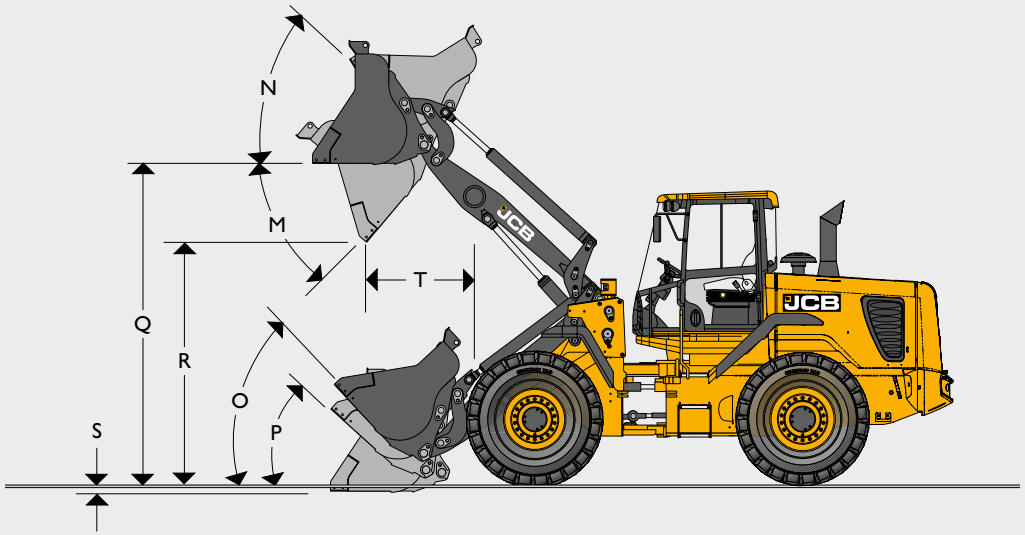

LOADER DIMENSIONS – 436 HT

Assumes the machine is fitted with Michelin 20.5R25 XHA (L3) tyres.

	Model		436 HT – STANDARD HEIGHT ARM								436 HT – HI LIFT ARM								436 HT – SUPER HI LIFT ARM							
	Bucket mounting		Direct				Quickhitch				Direct				Quickhitch				Direct				Quickhitch			
	Bucket type		General purpose								General purpose								General purpose							
	Bucket equipment		Tipped teeth		Reversible toeplate		Tipped teeth		Reversible toeplate		Tipped teeth		Reversible toeplate		Tipped teeth		Reversible toeplate		Tipped teeth		Reversible toeplate		Tipped teeth		Reversible toeplate	
	Bucket capacity (SAE heaped)	m^3	2.3	2.6	2.4	2.7	2.3	2.6	2.4	2.7	2.3	2.6	2.4	2.7	2.3	2.6	2.4	2.7	2.3	2.6	2.4	2.7	2.3	2.6	2.4	2.7
	Bucket capacity (struck)	m^3	1.984	2.270	2.057	2.346	1.984	2.270	2.057	2.346	1.984	2.270	2.057	2.346	1.984	2.270	2.057	2.346	1.984	2.270	2.057	2.346	1.984	2.270	2.057	2.346
	Bucket width	mm	2740	2740	2700	2700	2740	2740	2700	2700	2740	2740	2700	2700	2740	2740	2700	2700	2740	2740	2700	2700	2740	2740	2700	2700
	Bucket weight	kg	1151	1224	1163	1236	1124	1199	1136	1211	1151	1224	1163	1236	1124	1199	1136	1211	1151	1224	1163	1236	1124	1199	1136	1211
	Maximum material density	kg/m^3	2082	1814	1995	1747	1958	1706	1876	1642	1582	1379	1516	1327	1488	1396	1426	1248	1288	1123	1235	1081	1212	1055	1161	1016
	Tipping load straight	kg	11467	11310	11467	11310	10828	10676	10828	10676	8715	8595	8715	8595	8229	8114	8229	8114	7247	7148	7247	7148	6843	6747	6843	6747
	Tipping load full turn	kg	9578	9436	9578	9436	9009	8870	9009	8870	7279	7171	7279	7171	6847	6741	6847	6741	5929	5841	5929	5841	5576	5490	5576	5490
	Payload	kg	4789	4718	4789	4718	4504	4435	4504	4435	3639	3585	3639	3585	3423	3370	3423	3370	2964	2920	2964	2920	2788	2745	2788	2745
	Maximum break out force	kN	147	134	147	134	131	122	131	122	147	134	147	134	131	122	131	122	153	139	153	139	136	124	136	127
M	Dump angle maximum	degrees	50°	50°	50°	50°	50°	50°	50°	50°	45°	45°	45°	45°	45°	45°	45°	45°	50°	50°	50°	50°	50°	50°	50°	50°
N	Roll back angle full height	degrees	58°	58°	58°	58°	58°	58°	58°	58°	60°	60°	60°	60°	60°	60°	60°	60°	58°	58°	58°	58°	58°	58°	58°	58°
O	Roll back at carry	degrees	48°	48°	48°	48°	48°	48°	48°	48°	54°	54°	54°	54°	54°	54°	54°	54°	48°	48°	48°	48°	48°	48°	48°	48°
P	Roll back at ground level	degrees	43°	43°	43°	43°	43°	43°	43°	43°	45°	45°	45°	45°	45°	45°	45°	45°	43°	43°	43°	43°	43°	43°	43°	43°
Q	Load over height	mm	3755	3755	3755	3755	3755	3755	3755	3755	4409	4409	4409	4409	4409	4409	4409	4409	4976	4976	4976	4976	4976	4976	4976	4976
R	Dump height (45° dump)	mm	2806	2742	2974	2883	2721	2657	2862	2798	3460	3396	3628	3537	3375	3311	3516	3452	4023	3959	4191	4100	3938	3874	4079	4015
S	Dig depth	mm	132	132	106	106	132	132	106	106	127	127	101	101	127	127	101	101	105	105	79	79	105	105	79	79
T	Reach at dump height	mm	1148	1207	1044	1103	1225	1283	1121	1179	1148	1207	1044	1103	1225	1283	1121	1179	1172	1231	1068	1127	1249	1307	1145	1230
	Pin height	mm	4021	4021	4021	4021	4021	4021	4021	4021	4675	4675	4675	4675	4675	4675	4675	4675	5242	5242	5242	5242	5242	5242	5242	5242
	Reach maximum (45° dump) – horizontal arm	mm	1987	2051	1883	1947	1772	2136	1968	2032	2477	2541	2373	2437	2262	2626	2458	2522	2952	3016	2848	2912	2737	3101	2933	2997
	Operating weight (includes 80kg operator and full fuel tank)	kg	14491	14564	14503	14576	14788	14863	14800	14875	14981	15054	14993	15066	15278	15353	15290	15365	15533	15606	15545	15618	15830	15905	15842	15917

TYRE SIZE

436 ZX					Standard arms		Dimensions	
Tyre size	Manufacturer	Type	Rating	Op weight kg	STL kg	FTTL kg	Vertical mm	Width mm
20.5 - 25 (crossply)	Firestone		L2	-348	-208	-201	-9	+5
20.5 - 25 (crossply)	Goodyear	SGL	L2	-54	-32	-31	-9	+5
20.5 R 25 (radial)	Goodyear	RL - 2 +	L2	+76	+45	+44	-9	+5
20.5 R 25 (radial)	Bridgestone	VUT	L2	-160	-96	-93	0	0
20.5 R 25 (radial)	Michelin	XTLA	L2	-160	-96	-93	-9	+5
20.5 R 25 (radial)	Bridgestone	VMT	L3	0	0	0	0	0
550/65 R 25 (radial)	Michelin	XLD	L3	-120	-71	-69	0	0
20.5 R 25 (radial)	Michelin	XRD1A	L4	+456	+272	+264	+29	+8
20.5 R 25 (radial)	Michelin	XMINED2	L5	+680	+407	+393	+29	-3
20.5 R 25 (radial)	Goodyear	RL-5K	L5	+600	+358	+347	+29	-3
20.5R25 (radial)	JCB	Earthmover	L3	128	70	60	41	12
20.5-25 (crossply)	JCB	Sitemaster	L3	100	55	47	21	-7
Optional additional bolt-on counterweight				+380	+680	+570	0	0

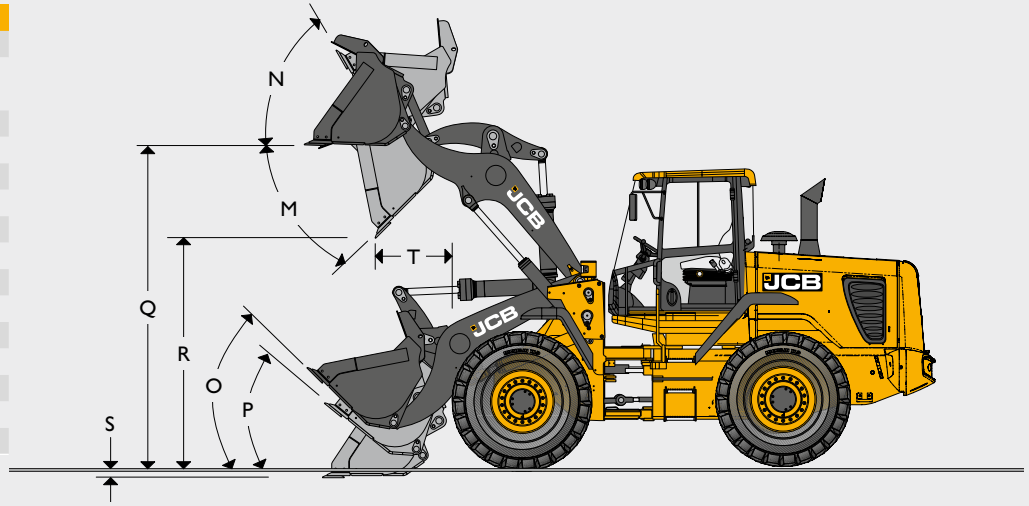

LOADER DIMENSIONS – 436 ZX

Assumes the machine is fitted with Michelin 20.5R25 XHA (L3) tyres

	Model		436 ZX								
	Bucket mounting		Direct					Quickhitch			
	Bucket type		General purpose		Penetration	General purpose		General purpose			
	Bucket equipment		Tipped teeth			Reversible toeplate		Tipped teeth		Reversible toeplate	
	Bucket capacity (SAE heaped)	m^3	2.3	2.6	2.6	2.4	2.7	2.3	2.6	2.4	2.7
	Bucket capacity (struck)	m^3	1.984	2.274	2.274	2.057	2.346	1.984	2.274	2.057	2.346
	Bucket width	mm	2740	2740	2740	2700	2700	2740	2740	2700	2700
	Bucket weight	kg	1250	1317	1361	1262	1329	1124	1199	1136	1211
	Maximum material density	kg/m^3	1999	1744	1752	1913	1676	1908	1664	1811	1600
	Tipping load straight	kg	11057	10911	10953	11044	10898	10551	10404	10451	10388
	Tipping load full turn	kg	9199	9069	9110	9185	9055	8778	8656	8694	8643
	Payload	kg	4599	4535	4555	4592	4527	4389	4328	4347	4321
	Maximum break out force	kN	176	162	162	176	162	157	144	157	144
M	Dump angle maximum	degrees	47°	47°	47°	47°	47°	47°	47°	47°	47°
N	Roll back angle full height	degrees	58°	58°	58°	58°	58°	58°	58°	58°	58°
O	Roll back at carry	degrees	45°	45°	45°	45°	45°	45°	45°	45°	45°
P	Roll back at ground level	degrees	37°	37°	37°	37°	37°	37°	37°	37°	37°
Q	Load over height	mm	3755	3755	3755	3755	3755	3755	3755	3755	3755
R	Dump height (45° dump)	mm	2824	2759	2759	2965	2833	2739	2674	2880	2748
S	Dig depth	mm	131	131	131	105	105	131	131	105	105
T	Reach at dump height	mm	1248	1312	1312	1144	1103	1333	1397	1229	1188
	Pin height	mm	4021	4021	4021	4021	4021	4021	4021	4021	4021
	Reach maximum (45° dump)	mm	2000	2064	2064	1896	1947	2077	2141	1973	2024
	Operating weight (includes 80kg operator and full fuel tank)	kg	14910	14977	15021	14922	14989	15207	15274	15219	15286

ENGINE

		426	436
Type		4 stroke direct injection	
Model		Cummins BTAA 5.9C	
Capacity	litres	5.9	
Aspiration		Turbo charged	
Cylinders		6	
Max gross power to SAE J1995/ISO 14396	kW (hp) @ 2000rpm	113 (152)	132 (177)
Rated gross power to SAE J1995/ISO 14396	kW (hp) @ 2200rpm	112 (150)	129 (173)
Nett power to SAE J1349/EEC 80/1269	kW (hp) @ 2200rpm	106 (146)	123 (165)
Max torque	Nm @ 1300rpm	633	786
Emissions		Tier 2	

TRANSMISSION

		426	436
Make and model		ZF 4WG 160 4 Speed	ZF 4WG 190 4 Speed
1st gear	kph	7.4	8.2
2nd gear	kph	14.5	14.5
3rd gear	kph	25.2	27
4th gear (forward only)	kph	37.9	37.9
Torque convertor stall ratio		2.549:1	2.873:1

AXLES

426	
Type	Open differentials/Limited slip differential
Make and model	ZF MT-L 3075 II (front) ZF MT-L 3065 II (rear)
Overall axle ratio	21.53:1
Rear axle oscillation	21°
436	
Type	Open differential / Limited slip differential
Make and model	ZF MT-L3085 II (front) ZF MT-L 3075 II (rear)
Overall axle ratio	20.184:1
Rear axle oscillation	21°

STEERING	Priority steer hydraulic system with emergency steering.
BRAKES	Hydraulic power braking on all wheels, hub mounted, oil immersed, multi-plate disc brakes, parking brake, mechanical type operating on transmission output shaft.
TYRES	A variety of tyre options are available including: 20.5-25 SGG (L2). 20.5-25 SGL (L2). 20.5R25 RL-2+ (L2). 20.5R25 VUT (L2). 20.5R25 XLTA (L2). 20.5R25 VMT (L3). 20.5R25 XHA (L3). 550/65R25 XLD (L3). 20.5R25 XRDIA (L4). 20.5R25 XMINED2 (L5). 20.5R25 RL-5K (L5). 620-75 MEGA XBIB. 750-75 MEGA XBIB.
CAB	426/436 in cab noise level 73Lp

ELECTRICAL SYSTEM

System voltage	Volt	24
Alternator output	Amp hour	70
Battery capacity	Amp hour	2 x 110

LOADER HYDRAULICS

		426	436
Pump type		Twin variable displacement piston pumps	
Pump 1 max. flow	l/min	132	132
Pump 1 max. pressure	bar	250	250
Pump 2 max. flow	l/min	132	132
Pump 2 max. pressure	bar	160	160
Hydraulic cycle times at full engine revs		Seconds	
		426	**436**
Arms raise (full bucket)		4.4	5.9
Bucket dump (full bucket)		1.0 (1.3 ZX)	1.0
Arms lower (empty bucket)		2.7	3.4
Total cycle		8.1 (8.4 ZX)	10.3

SERVICE FILL CAPACITIES

		426	436
Hydraulic system	litres	210	210
Fuel tank	litres	230	230
Engine oil sump	litres	14	14
Transmission oil system	litres	27	32.5
Axle oil (front)	litres	39	39
Axle oil (rear)	litres	37	39
Engine coolant system	litres	35	35

STANDARD EQUIPMENT	**Loader:** Bucket reset mechanism, loader arm kickout mechanism, loader control isolator, single lever servo control, high torque geometry combines with excellent visibilty between the arms. **Engine:** Air cleaner - 2 stage dry type - cyclonic with primary and safety elements, silencer and exhaust stack, sedimenter, twin bowl fuel filters, alternator and compressor drive belt guards. Isolated cooling package with hydraulically driven cooling fan. **Transmission:** Single lever shift control, speed inhibitor, neutral start, disconnect on footbrake and loader lever, disconnect isolator switch, direction changes and kickdown on gear selector and loader control lever. **Axles:** Epicyclic wheel hub reduction, fixed front, oscillating rear. Brakes: Multi-plate wet disc brakes, organic linings, dual circuit hydraulic power assisted. Parking disc brake on transmission output shaft. **Hydraulics:** Twin piston pump with priority steer, emergency steer back-up, 2 spool loader circuit with accumulator support, 3rd spool auxiliary hydraulic circuit as standard. Hydraulic tank located in the rear chassis fabrication. **Steering:** Adjustable steering column, "soft feel" steering wheel 5 turns lock to lock, resilient stops on max lock. **Cab:** ROPS/FOPS safety structure, interior reading light, centre mounted master warning light. Electronic monitoring panel with LCD message display. Two speed intermittent front windscreen wipe/wash and self park, single speed rear windscreen wipe/wash and self park. 3 speed heater/demisting with replaceable air filter, LH and RH opening windows, sun visor, sun blind, internal rear view mirror, heated external mirrors, adjustable suspension seat with belt and headrest, operator storage facilities, laminated windscreen, heated rear screen, loader control isolator, horn. **Electrical:** Road lights front and rear, parking lights, front and rear working lights, reverse alarm and light, rear fog light, battery isolator, radio wiring and speakers, 70 amp alternator, rotating beacon. **Bodywork:** Front and rear fenders, side and rear access panels, flexible bottom step, full width rear counterweight, recovery hitch, lifting lugs.
OPTIONAL EQUIPMENT	Air conditioning, limited slip differentials front/rear axles, Turbo 2 and dust buster pre-cleaner, tooth guard, replaceable bucket wearparts, epoxy coated radiator/coolers, automatically reversing cooling fan, stainless steel brake pipes, smooth ride system (SRS), hydraulic quickhitch, full rear fenders, reversing camera (colour), additional front and rear worklights, auto greasing system, joystick or Multi-lever hydraulic controls, auxiliary hydraulic control on seperate lever or joystick mounted (proportional),Smart reverse alarm, canopy cab, Wastemaster cab, Livelink telematics, widecore radiator, sealed electrics, grease gun and cartridge, basic and full belly guard kits, mesh air intake screen, ARV kit, safety strut, transmission cooler bypass, 24V to 12V in cab converter, cab screen guards, additional front and rear work lights, heated air suspension seat, heated mirrors, extra counterweight, light guards, front and rear blinds, engine block heater, biodegradable hydraulic oil, cab filtration options, fire extinguisher, number plate light kit, auxiliary 4th spool hydraulic service, grease gun, LiveLink telematics.

LOADER DIMENSIONS – FORK FRAME WITH FORKS

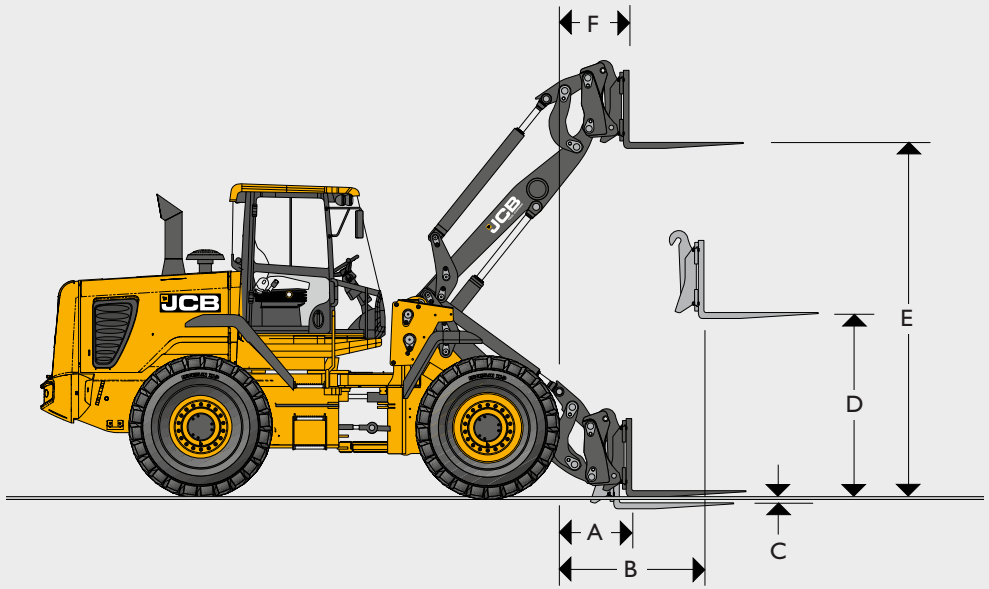

			Standard Height Arm				Hi Lift Arm				Super Hi Lift Arm		ZX Arm	
Assumes the fitment of Michelin 20.5R25 XHA (L3) tyres			Parallel fork		Non parallel fork		Parallel fork		Non parallel fork		Parallel fork	Non parallel fork		
			426 HT	436 HT	426 HT	436 HT	426 HT	436 HT	426 HT	436 HT	436 HT	436 HT	426 ZX	436 ZX
	Fork carriage width	mm	1500	1500	1500	1500	1500	1500	1500	1500	1500	1500	1500	1500
	Length of tines	mm	1220	1220	1220	1220	1220	1220	1220	1220	1220	1220	1220	1220
A	Reach at ground level	mm	760	791	770	798	1173	1147	1183	1154	2014	2021	770	798
B	Reach at arms horizontal	mm	1545	1613	1545	1620	1893	2103	1893	2110	2578	2585	1545	1620
C	Below ground level	mm	-52	8	-25	16	11	3	38	11	-19	-11	-42	16
D	Arms, horizontal height	mm	1906	1946	1867	1936	1906	1946	1867	1936	1946	1936	1867	1936
E	Arms, maximum height	mm	3718	3828	3695	3818	4148	4482	4125	4472	5045	5045	3695	3818
F	Reach at maximum height	mm	792	862	800	869	954	862	962	869	886	893	800	869
	Payload*	kg	5000	5000	5000	5000	4518	4650	4518	4650	3599	3599	5260	5610
	Tipping load straight	kg	7571	8589	7571	8589	6587	6871	6587	6871	5428	5428	7722	8289
	Tipping load full turn (40°)	kg	6492	7267	6492	7267	5648	5813	5648	5813	4499	4499	6575	7013
	Attachment weight	kg	440	482	440	482	440	482	440	482	440	440	440	482

*At the centre-of-gravity distance 500mm. Based on 80% of full turn tipping load as defined by ISO 8313.

Manual fork spacings at 50mm increments. Fork section 100mm x 50mm.

BUCKET CAPACITIES – 426

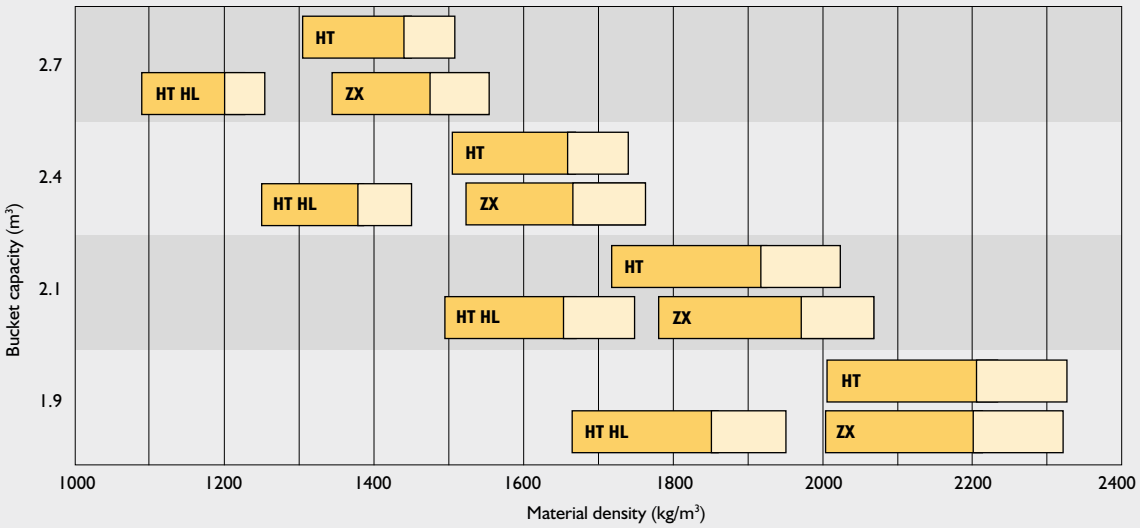

BUCKET CAPACITIES – 436

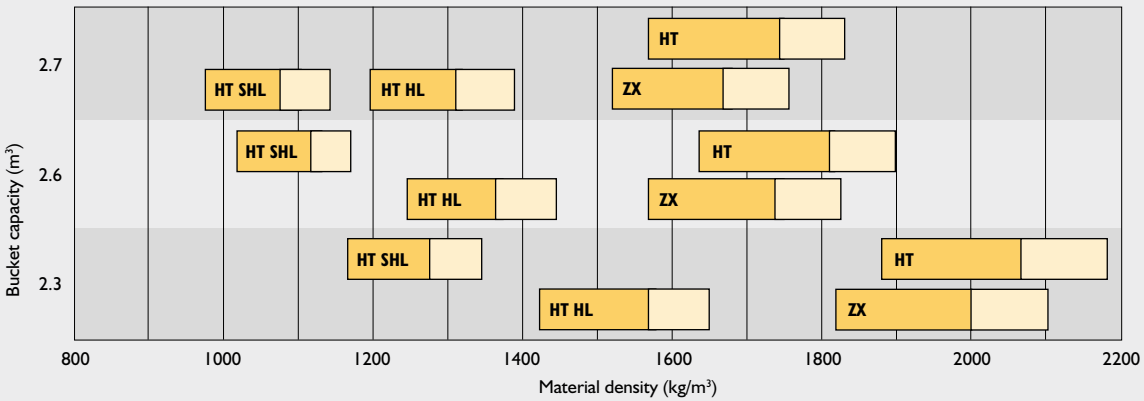

HT = Standard height arm HT HL = High lift arm HT SHL = Super high lift arm ZX = Z-bar

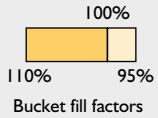

Bucket fill factors

BUCKET SELECTOR – STANDARD HEIGHT ARM

Material	Loose density (kg/m³)	Fill factor (%)
Snow (fresh)	200	110
Peat (dry)	400	100
Sugar beet	530	100
Coke (loose)	570	85
Barley	600	85
Petroleum coke	680	85
Wheat	730	85
Coal bitumous	765	100
Fertiliser (mixed)	1030	85
Coal anthracite	1046	100
Earth (dry) (loose)	1150	100
Nitrate fertiliser	1250	85
Sodium chloride (dry) (salt)	1300	85
Cement Portland	1440	100
Limestone (crushed)	1530	100
Sand (dry)	1550	100
Asphalt	1600	100
Gravel (dry)	1650	85
Clay (wet)	1680	110
Sand (wet)	1890	110
Fire clay	2080	100
Copper (concentrate)	2300	85
Slate	2800	100
Magnetite	3204	100